D H E C

PROMOTE PROTECT PROSPER

C. Earl Hunter, Commissioner

Promoting and protecting the health of the public and the environment.

PUBLIC NOTICE
AMENDMENT REQUEST

The permittee for P/N# **2006-1084-7IE-P, Martin Ottaway**, has requested an amendment to that issued permit. Specifically, the applicant proposes to build a 4' x 41' walkway leading to a 3' x 16' ramp and an 8' x 24' floating dock. The applicant also proposes to build a 12' x 24' boatlift with a 1' overhang adjacent to a 3' catwalk on each side of the floating dock. The proposed amendment is for modifications to joint use dock, on and adjacent to Atlantic Intracoastal Waterway at Lots 8 & 9, North Myrtle Beach, Horry County, South Carolina.

Written comments will be received on this amendment request until May 31, 2010 at the address listed below. For further information please contact the project manager, Tanitra S. Marshall, 843-238-4528.

May 21, 2010

SOUTH CAROLINA DEPARTMENT OF HEALTH AND ENVIRONMENTAL CONTROL

Ocean and Coastal Resource Management

Myrtle Beach Office · 927 Shine Avenue · Myrtle Beach, SC 29577

Phone: 843-238-4528 · Fax: 843-238-4526· www.scdhec.gov

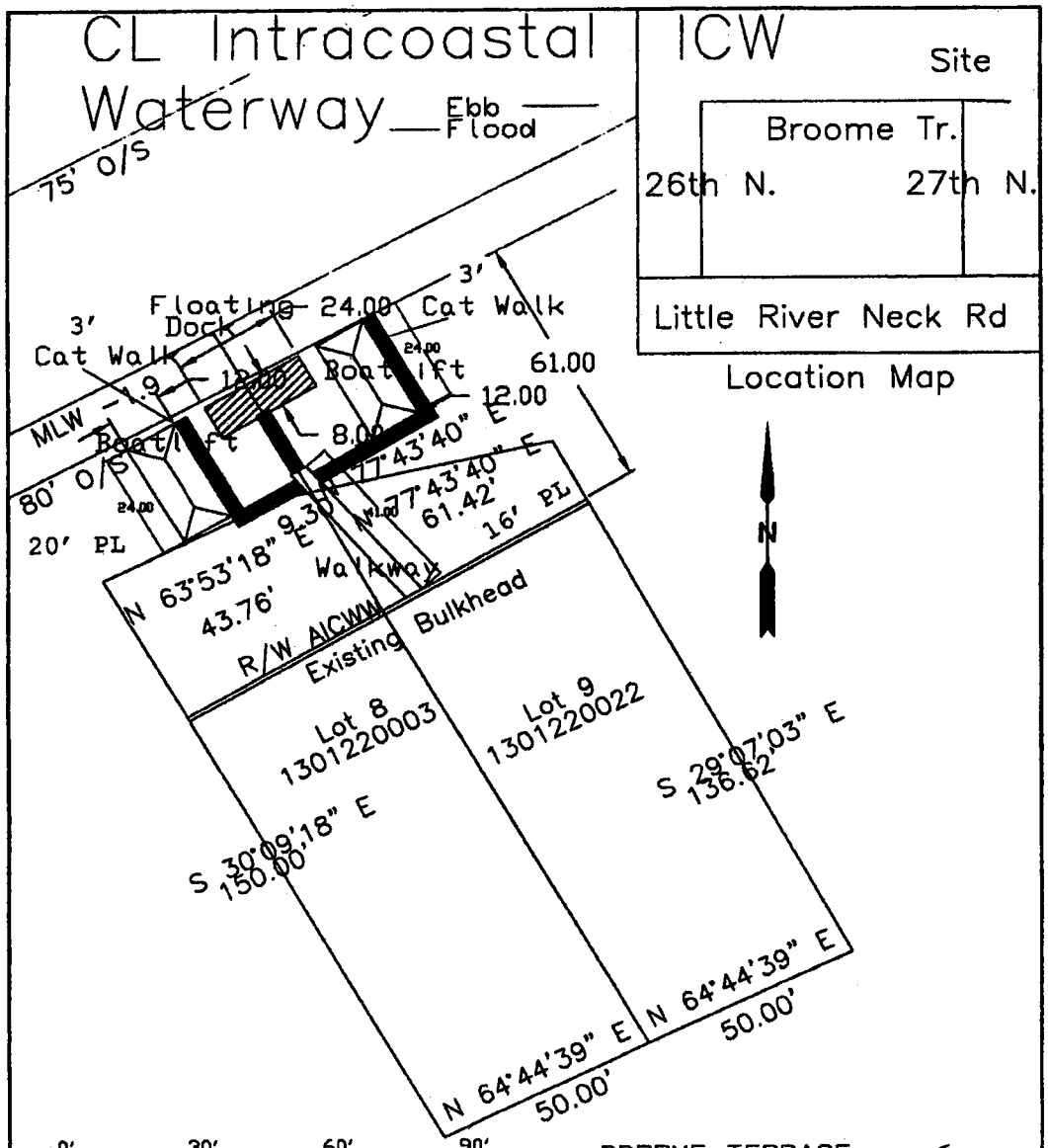

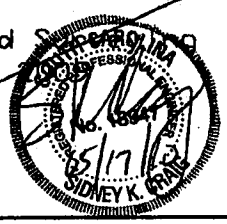

The Bulkhead/Critical Area Line as verified by
T. Marshall on April 20, 2010 per survey
By Eric Perry dated April 15, 2010

PYRAMID ENGINEERING

3310 Poinsett Street
N. Myrtle Beach, SC 29582

2003-1084-71E

PROPOSED SITE PLAN
OF
Lot 8 and 9 Block M Little River
Little River, TWP, HORRY COUNTY, SC

THE PROPERTY OF Martin Ottaway

DEED REFERENCE IN BOOK _____ PAGE _____

Lot #:	Block #:	Sheet No:	1 OF 6
Tax Map Number	1301220003	Lot Size:	.18 ac
Street Address:	Broome Terrace	Date:	05/17/10
City/ State/ Zip:	NMB, SC 29582	File:	skc

Not to Scale

NOTES:

1. THIS IS A PROPOSED DETAIL PLAN AND SHALL NOT BE CONSTRUED TO PERMIT THE LOCATION, DESCRIPTION, ESTABLISHMENT OR REESTABLISHMENT OF PROPERTY LINES OR DESCRIPTIONS OF LAND BOUNDARIES FOR CONVEYANCE.
2. OWNER/ CONTRACTOR TO VERIFY ALL HOUSE DIMENSIONS, ZONING REQUIREMENTS & RESTRICTIONS BEFORE STAKING

Side View of Walkway

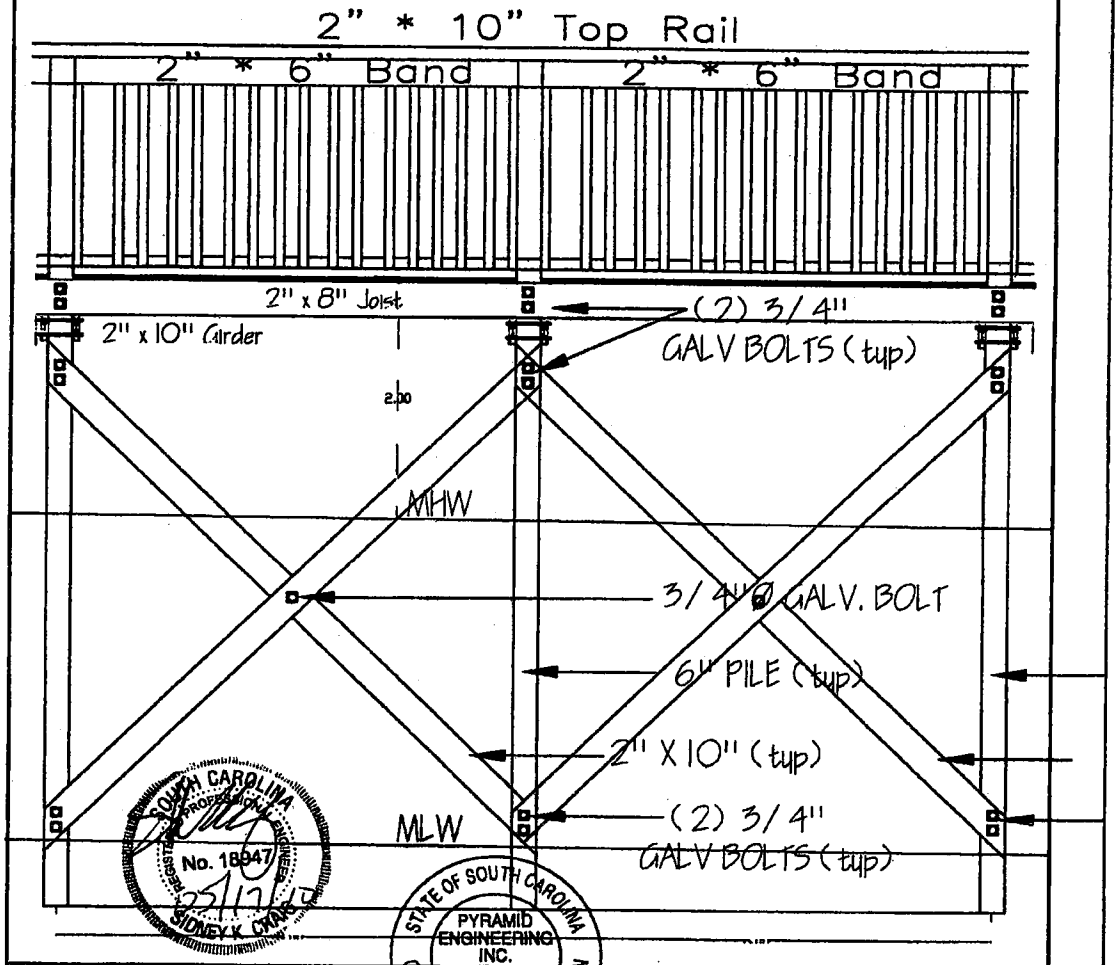

SOUTH CAROLINA PROFESSIONAL ENGINEER REGISTERED No. 18947 SIDNEY K. CHARLES 05/17/10

STATE OF SOUTH CAROLINA PYRAMID ENGINEERING INC. C01924 CERTIFICATE OF AUTHORIZATION

PYRAMID ENGINEERING

3310 Polmsett Street
N. Myrtle Beach, SC 29582

2003-1084-71E

PROPOSED SITE PLAN
OF
Lot 8 and 9 Block M Little River
Little Rover. TWP, HORRY COUNTY, SC

THE PROPERTY OF Martin Ottaway

DEED REFERENCE IN BOOK _____ PAGE _____

Lot #:	Block #:	Sheet No:	2 of 6
Tax Map Number	1301220003	Lot Size:	.18 ac
Street Address:	Broome Terrace	Date:	05/17/10
City/ State/ Zip:	NMB, SC 29582	File:	skc

Not to Scale

Floating Dock Details

Not to Scale

8 x 24 Feet

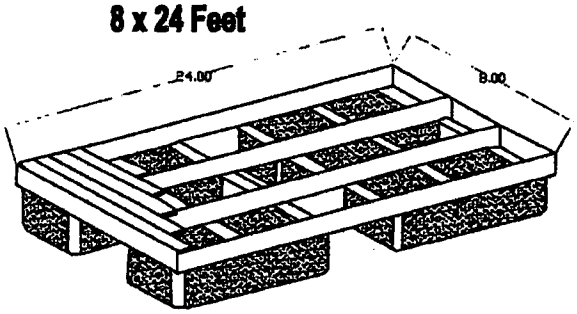

Corner Braces

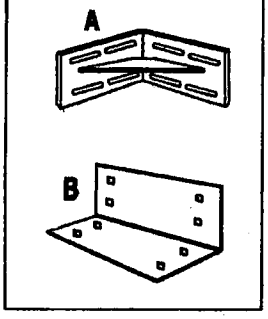

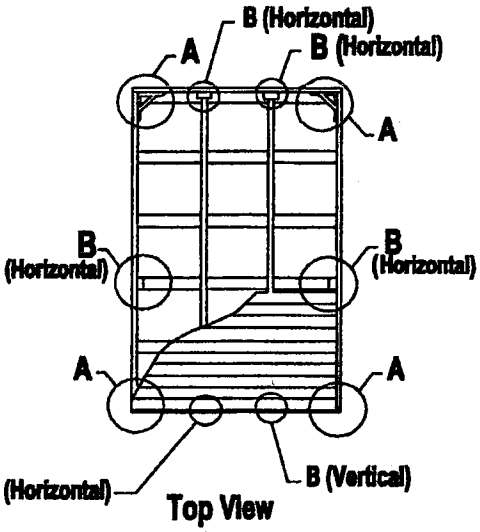

Top View

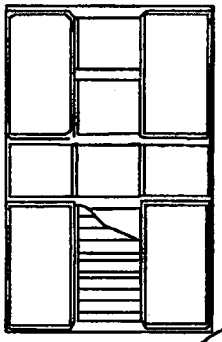

Bottom View

SOUTH CAROLINA REGISTERED PROFESSIONAL ENGINEER No. 18947 SIDNEY K. CRAIG 05/17/10

STATE OF SOUTH CAROLINA PYRAMID ENGINEERING INC. C01924 CERTIFICATE OF AUTHORIZATION

PYRAMID ENGINEERING INC.

3310 Pollnett Street
N. Myrtle Beach, SC 29582

2003-1084-71E

PROPOSED SITE PLAN
OF
Lot 8 and 9 Block M Little River
Little River. TWP, HORRY COUNTY, SC

THE PROPERTY OF Martin Ottaway

DEED REFERENCE IN BOOK _____ PAGE _____

Lot #:	Block #:	Sheet No:	3 of 6
Tax Map Number	1301220003	Lot Size:	.18 ac
Street Address	Broome Terrace	Date:	05/17/10
City/ State/ Zip	NMB, SC 29582	File:	skc

Not to Scale

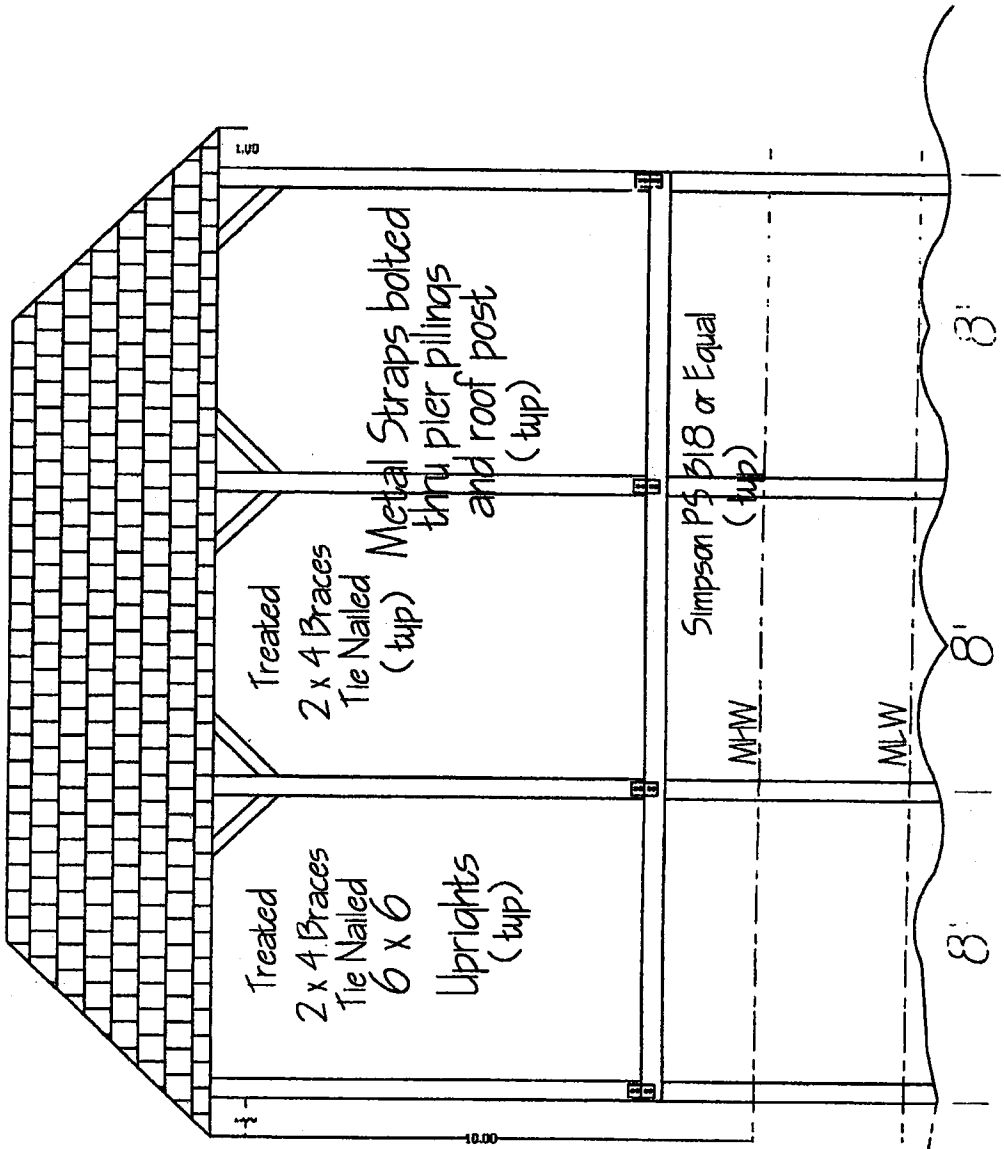

Front/ Rear Elevation

SOUTH CAROLINA REGISTERED PROFESSIONAL ENGINEER No. 18947 SIDNEY K. CRAIG

05/17/10

STATE OF SOUTH CAROLINA PYRAMID ENGINEERING INC. C01924 CERTIFICATE OF AUTHORIZATION

PYRAMID ENGINEERING

3310 Pollnett Street
N. Myrtle Beach, SC 29582

2008-1084-71E

PROPOSED SITE PLAN
OF
Lot 8 and 9 Block M Little River
Little River. TWP, HORRY COUNTY, SC

THE PROPERTY OF Martin Ottaway

DEED REFERENCE IN BOOK _____ PAGE _____

Lot #:	Block #:	Sheet No:	4 of 6
Tax Map Number	1301220003	Lot Size:	.18 ac
Street Address	Broome Terrace	Date:	05/17/10
City/ State/ Zip	NMB, SC 29582	File:	SKC

Not to Scale

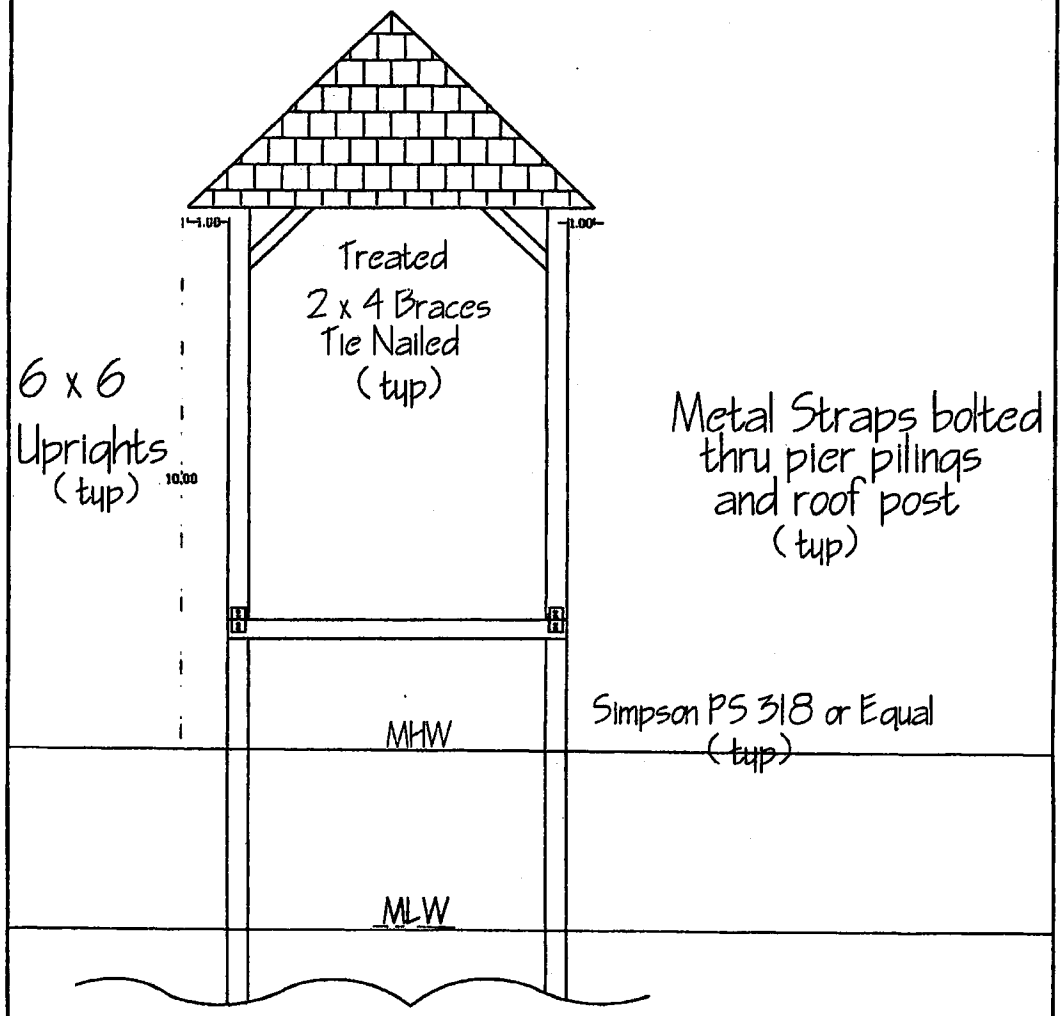

Side Elevation

SOUTH CAROLINA REGISTERED PROFESSIONAL ENGINEER No. 18947 SIDNEY K. CRAIG

05/7/10

STATE OF SOUTH CAROLINA PYRAMID ENGINEERING INC. C01924 CERTIFICATE OF AUTHORIZATION

PYRAMID ENGINEERING INC.

3310 Poinsett Street
N. Myrtle Beach, SC 29582

2006-1084-71E

PROPOSED SITE PLAN
OF
Lot 8 and 9 Block M Little River
Little Rover. TWP, HORRY COUNTY, SC

THE PROPERTY OF Martin Ottaway

DEED REFERENCE IN BOOK _____ PAGE _____

Lot #:	Block #:	Sheet No:	5 of 6
Tax Map Number	1301220003	Lot Size:	.18 ac
Street Address	Brooms Terrace	Date:	05/17/10
City/ State/ Zip:	NMB, SC 29582	File:	SKC

Not to Scale

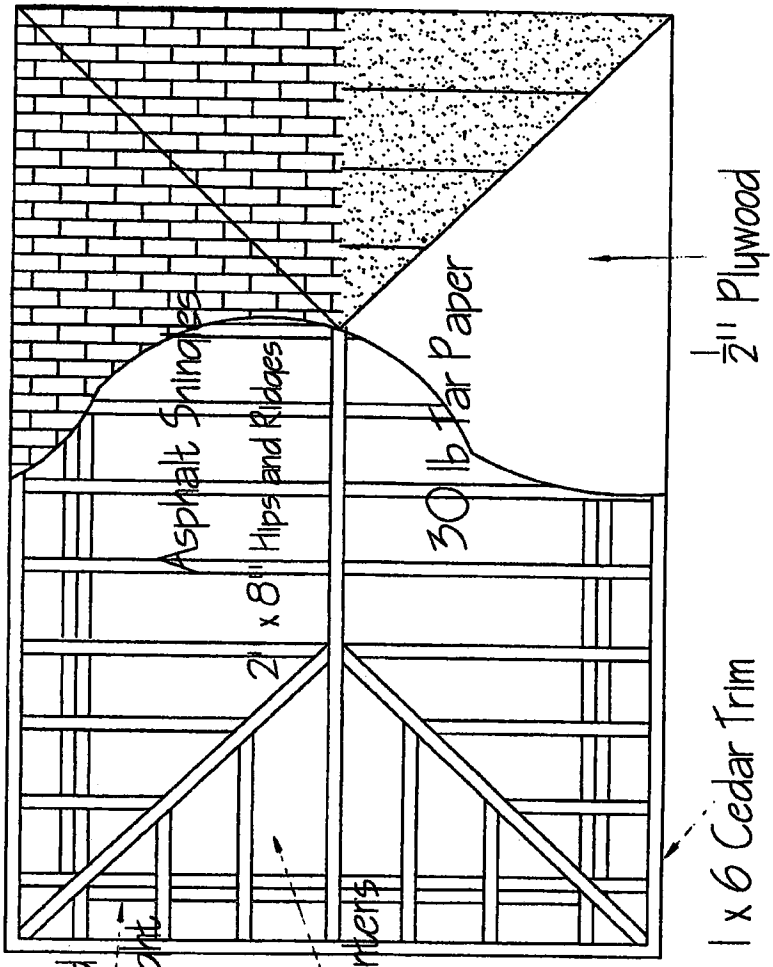

Roof Plan

SOUTH CAROLINA REGISTERED PROFESSIONAL ENGINEER SIDNEY K. CRAIG

05/17/10

STATE OF SOUTH CAROLINA PYRAMID ENGINEERING INC. C01924 CERTIFICATE OF AUTHORIZATION

PYRAMID ENGINEERING

3310 Pollsett Street
N. Myrtle Beach, SC 29582

2006-1084-71E

PROPOSED SITE PLAN
OF
Lot 8 and 9 Block M Little River
Little River, TWP, HORRY COUNTY, SC

THE PROPERTY OF Martin Ottaway

DEED REFERENCE IN BOOK _____ PAGE _____

Lot #:	Block #:	Sheet No:	6 of 6
Tax Map Number	1301220003	Lot Size:	.18 ac
Street Address	Broome Terrace	Date:	05/17/10
City/State/Zip	NMB, SC 29582	File:	SKC

Not to Scale