D H E C

PROMOTE PROTECT PROSPER

South Carolina Department of Health
and Environmental Control

QUALITY ASSURANCE PROGRAM PLAN
FOR THE UNDERGROUND STORAGE TANK MANAGEMENT DIVISION

Bureau of Land and Waste Management
South Carolina Department of Health and Environmental Control
Columbia, South Carolina

October 2009

Document Review and Revision Record

Note: Actions older than 5 years may be removed from this record

Approval Date	Revision No.	Record of Activity

Section A – Project Management

A1 Quality Assurance Program Plan Identification Form

Document Title: Quality Assurance Program Plan
Underground Storage Tank (UST) Management Division
Bureau of Land and Waste Management (BLWM)
South Carolina Department of Health and Environmental Control (SCDHEC)

Address: 2600 Bull Street
Columbia, SC 29201

Telephone: (803) 896-6240

Plan Coverage: This Quality Assurance Plan covers all water and soil quality data collection as well as analysis activities conducted by or regulated by the UST Management Division at SCDHEC.

Prepared by Debra Thoma, SC DHEC UST

APPROVAL FOR AGENCIES

Christopher S. Doll, PG, UST QAPP Coordinator
Bureau of Land and Waste Management
SCDHEC

10-22-09
Date

Daphne Neel, Chief
Bureau of Land and Waste Management
SCDHEC

10/26/09
Date

Danny France, Quality Assurance Manager
Office of QA and Data Integration
USEPA, Region 4

12/1/09
Date

Nydia Burdick, Quality Assurance Officer
Environmental Quality Control
SCDHEC

10-22-09
Date

DOCUMENT REVIEW AND REVISION RECORD **2**

SECTION A – PROJECT MANAGEMENT **3**

A1 QUALITY ASSURANCE PROGRAM PLAN IDENTIFICATION FORM 3
List of Terms Used in This Document: *6*
Introduction *14*
Quality Assurance Policy *14*
A3 DISTRIBUTION LIST 14
A4 ORGANIZATION 16
A5 PROBLEM DEFINITION/BACKGROUND 19
A6 PROJECT DESCRIPTION 19
Risk-Based Corrective Action (RBCA) Procedures: *21*
Work to be done for the Initial Groundwater Assessment (IGWA) Assessment: *35*
Work to be done for Tier I Assessment: *36*
Work to be done for Tier II Assessment *38*
Site Rehabilitation *43*
Other UST Work to be implemented *44*
A7 DATA QUALITY OBJECTIVES AND DATA QUALITY INDICATORS 44
A8 TRAINING AND CERTIFICATION 47
A9 DOCUMENTS AND RECORDS 49

SECTION B – DATA GENERATION AND ACQUISITION **55**

B1 SAMPLING PROCESS DESIGN/EXPERIMENTAL DESIGN 55
IGWA Sampling Process Design: *55*
Tier I Sampling Process Design *57*
Tier II Implementation *60*
Site Rehabilitation *69*
AFVR (Aggressive Fluid Vapor Recovery) *78*
Groundwater Sampling Events *80*
Monitoring Well Installations *81*
Granulated Activated Carbon Unit Installation *83*
Abandonment of Monitoring Wells *84*
B2 SAMPLING METHODS 85
Soil Sampling *85*
Groundwater Sampling *88*
B3 SAMPLE HANDLING & CUSTODY 99
B4 ANALYTICAL METHODS 100
B5 QUALITY CONTROL REQUIREMENTS 100
B6 INSTRUMENT/EQUIPMENT TESTING, INSPECTION, AND MAINTENANCE 102
B7 INSTRUMENT/EQUIPMENT CALIBRATION AND FREQUENCY 102
B8 INSPECTION/ACCEPTANCE OF SUPPLIES AND CONSUMABLES 103
B9 NON-DIRECT MEASUREMENTS 104
B10 DATA MANAGEMENT 104

SECTION C ASSESSMENT AND OVERSIGHT **106**

SECTION C ASSESSMENT AND OVERSIGHT 106

C1 ASSESSMENT AND RESPONSE ACTIONS 106
C2 REPORTS TO MANAGEMENT 109

SECTION D DATA VALIDATION AND USABILITY 109

D1 DATA REVIEW, VERIFICATION AND VALIDATION 109
D2 DATA VALIDATION AND VERIFICATION METHODS 110
D3 RECONCILIATION WITH USER REQUIREMENTS 112

List of Tables

TABLE 1 COMPARISON OF THE TIERS 13
TABLE 2 DISTRIBUTION LIST 15
TABLE 3 POTENTIAL INITIAL RESPONSE ACTIONS TO ELIMINATE IMMEDIATE THREAT FOR TYPICAL RELEASE SCENARIOS 25
TABLE 4 CHOICE OF EXPOSURE POINTS 31
TABLE 5 POTENTIAL EXPOSURE PATHWAYS 38
TABLE 6 REQUIRED SAMPLING PARAMETERS 57
TABLE 7 GROUNDWATER ANALYTES 67
TABLE 8 COC MASS REDUCTION CALCULATION EXAMPLE 74
TABLE 9 WELL CASING DIAMETER VS. WELL VOLUME 91
TABLE 10 FIELD PARAMETER ACCEPTANCE CRITERIA 103
TABLE 11 LIST OF CONSUMABLES AND ACCEPTANCE CRITERIA 104
TABLE 12 VALIDATION ACTIVITIES 112
TABLE 13 CONSIDERATIONS FOR USABILITY ASSESSMENT 113

List of Figures

FIGURE 1 ORGANIZATIONAL CHART 18
FIGURE 2 FIGURES OF EXPOSURE POINTS 31

Appendices

APPENDIX A: UST MANAGEMENT DIVISION RBCA DECISION MAKING FLOW CHART 114
APPENDIX B: CONTRACTOR ADDENDUM 117
APPENDIX C: RBSL LOOK-UP TABLES 134
APPENDIX D: SITE CONCEPTUAL MODELS 139
APPENDIX E: ANALYTICAL PARAMETERS AND METHODS 142
APPENDIX F: PRESERVATION AND HOLDING TIMES 148
APPENDIX G: DOMENICO MODEL 154
APPENDIX H: STANDARD FIELD CLEANING PROCEDURES 160
APPENDIX I: PUMP OPERATING PROCEDURES 167
APPENDIX J: UST MANAGEMENT DIVISION RETENTION SCHEDULE 173
APPENDIX K: CONTRACTOR VERIFICATION CHECKLIST 175
APPENDIX L: SCDHEC EQC AND OCRM QUALITY MANAGEMENT PLAN 179
APPENDIX M: PROJECT STATUS UPDATE FORM 182

List of Terms Used in This Document:

· Abatement - Actions taken to mitigate fire and safety hazards and to prevent further migration of hydrocarbons in their vapor, dissolved, or liquid phase.

· Accuracy - A measure of the closeness of an individual measurement or the average of a number of measurements to the true value. Accuracy includes a combination of random error (precision) and systematic error (bias) components that are due to sampling and analytical operations; the EPA recommends using the terms "precision" and "bias", rather than "accuracy," to convey the information usually associated with accuracy. Refer to Appendix E, Data Quality Indicators for a more detailed definition.

· Active Remediation - Physical actions taken to reduce the concentration of CoCs to acceptable levels.

· Assessment - The evaluation process used to measure the performance or effectiveness of a system and its elements. As used here, assessment is an all-inclusive term used to denote any of the following: audit, performance evaluation (PE), management systems review (MSR), peer review, inspection, or surveillance

· Attenuation - The reduction in concentration of CoCs in the environment with distance and time due to processes that include, but are not limited to, diffusion, dispersion, and absorption.

· Audit (quality) - A systematic and independent examination to determine whether quality activities and related results comply with planned arrangements and whether these arrangements are implemented effectively and are suitable to achieve objectives.

· Bias – The systematic or persistent distortion of a measurement process, which causes errors in one direction (i.e., the sample measurement is different from the sample's true value-in one direction- high or low).

· Blank – A sample subjected to the usual analytical or measurement process to establish a zero baseline or background value.

· Calibration – A comparison of a measurement standard, instrument, or item with a standard or instrument of higher accuracy to detect and quantify inaccuracies and to report or eliminate those inaccuracies by adjustments.

· Certification – The process of testing and evaluation against specifications designed to document, verify, and recognize the competence of a person, organization, or other entity to perform a function or service, usually for a specified time.

· Chain of Custody – (COC) – An unbroken trail of accountability that ensures the physical security of the samples, data, and records.

· Chemical of Concern (CoC) - A specific constituent that is identified for evaluation in the risk assessment process.

· Compliance Point (CP) – see Point(s) of Compliance below.

· Compliance Point Concentration (CPC) - The maximum concentration allowable at the point of compliance in order to protect the exposure point.

· Corrective Action - any measures take to rectify conditions adverse to quality, and where possible, to preclude their recurrence. For instance in remaking standards in the case of a bad calibration.

· Corrective Action Plan (CAP) - A document outlining proposed site rehabilitation actions.

· Data Quality Assessment (DQA) - The scientific and statistical evaluation of data to determine if data obtained from environmental operations are of the right type, quality, and quantity to support their intended use. The five steps of the DQA Process include: 1) reviewing the DQOs and sampling design, 2) conducting a preliminary data review, 3) selecting the statistical test, 4) verifying the assumptions of the statistical test, and 5) drawing conclusions from the data.

· Data Quality Indicators (DQIs) - The quantitative statistics and qualitative descriptors that are used to interpret the degree of acceptability or utility of data to the user. The principal data quality indicators are bias, precision, accuracy (bias and precision are), comparability, completeness, and representativeness.

· Data Quality Objectives (DQOs) - The qualitative and quantitative statements derived from the DQO Process that clarify a study's technical and quality objectives, define the appropriate type of data, and specify tolerable levels of potential decision errors that will be used as the basis for establishing the quality and quantity of data needed to support decisions.

· Data Quality Objectives (DQO) Process - A systematic strategic planning tool based on the scientific method that identifies and defines the type, quality, and quantity of data needed to satisfy a specified use. DQOs are the qualitative and quantitative outputs from the DQO Process.

· Data usability – The process of ensuring or determining whether the quality of the data produced meets the intended use of the data.

· Department - The South Carolina Department of Health and Environmental Control.

· Detection Limit (DL) - A measure of the capability of an analytical method to distinguish samples that do not contain a specific analyte from samples that contain low concentrations of the analyte; the lowest concentration or amount of the target analyte that can be determined to be different from zero by a single measurement at a stated level of probability. DLs are analyte- and matrix-specific and may be laboratory-dependent.

· Direct Exposure Pathway - An exposure pathway where the point of exposure is at the source without a release to any other medium (for example, inhalation of vapors or dermal contact with free product).

· Engineering Controls – Permanent or temporary manmade modifications to a site to reduce or eliminate the potential for exposure to a CoC, such as capping or installing a water treatment system on a well.

· Engineering Report (ER) - A document outlining the design and specifications of a site rehabilitation system.

· ETBA - 3,3-Dimethyl-1-butanol

· Exposure - Contact of a receptor(s) with CoC(s). Exposure is quantified as the amount of CoC available at the exchange boundaries, such as skin or lungs, and available for absorption by the human body.

· Exposure Assessment - The determination or estimation, qualitative or quantitative, of the magnitude, frequency, duration, and route of exposure.

· Exposure Pathway - The course CoCs travel from the source area(s) to a receptor. A complete exposure pathway includes a source or release from a source, an exposure point, and an exposure route. If the exposure point differs from the source, a transport/exposure medium (e.g., ground water) is included.

· Exposure Point - The point at which it is assumed that a receptor, either potential or actual, can come into contact, either now or in the future, with the CoC. Maximum contaminant levels or other existing water quality standards must be met at the exposure point.

· Exposure Route - The manner in which CoCs come in contact with an organism (i.e., ingestion, inhalation, dermal contact).

· Field blank — A blank used to provide information about contaminants that may be introduced during sample collection, storage, and transport. A clean sample, carried to the sampling site, exposed to sampling conditions, returned to the laboratory, and treated as an environmental sample.

· Flag — A notation to indicate that the data point associated must be qualified—that a deficiency or deviation exists that is associated with that sample. Flags often appear to resemble footnotes. The notation as to what the flag means is given further on in the document.

· Gas Chromatograph (GC) - An instrument used to determine the levels of CoCs in a vapor, soil or ground water sample.

· Holding time — The period of time a sample may be stored prior to its required analysis. While exceeding the holding time does not necessarily negate the veracity of analytical results, it causes the qualifying or "flagging" of any data not meeting all of the specified acceptance criteria.

· Initial Ground Water Assessment (IGWA) – An assessment to determine soil and ground water CoCs by the installation of one monitoring well.

· Indirect Exposure Pathways - An exposure pathway with at least one intermediate release to any media between the source and the point of exposure (e.g., leaching of CoCs from soil to ground water).

· Institutional Controls - The restriction on use or access (e.g., existing deed restrictions, restrictive zoning and conditions listed in the registry of releases) to a site or facility to eliminate or minimize potential exposure to CoCs.

· In-Situ Monitoring- Analysis or observations taken immediately at the site. For instance, pH analysis that must take place within 15 minutes of sample collection.

· Laboratory Fortified Blank (LFB) — A sample prepared by adding a known mass of a target analyte to a specified amount of analyte-free deionized (DI) water. Spiked samples are used, to determine the

recoveries for samples taken through the procedure and are part of the quality control for the procedure.

· Laboratory Matrix spike (LFM) — A sample prepared by adding a known mass of a target analyte to a specified amount of a sample for which an independent estimate of the target analyte concentration is available. Spiked samples are used, for example, to determine the effect of the matrix on a method's recovery efficiency

· Limit of quantification — The minimum concentration of an analyte or Class of analytes in a specific matrix that can be identified and quantified above the method detection limit and within specified limits of precision and bias during routine analytical operating conditions.

· Maximum Contaminant Level (MCL) - A standard for drinking water established by the USEPA under the Safe Drinking Water Act. The MCL is the maximum permissible level of CoC in water that is used as a drinking water supply.

· Monitored Natural Attenuation (MNA) - The verifiable reduction of CoC through naturally occurring microbial activity or attenuation mechanisms.

·Must — When used in a sentence, a term denoting a requirement that has to be met.

· Operator – An entity as defined in Section 44-2-20(10) of the State Underground Petroleum Environmental Response Bank Act.

· Organic Vapor Analyzer (OVA) - A field instrument used to measure the organic vapors present in a sample of soil or ground water. A Photo Ionization Detector (PID) is a type of OVA.

· Owner – An entity as defined in Section 44-2-20(12) of the State Underground Petroleum Response Bank Act.

· Point(s) of Compliance - A location(s) selected between the source area and the exposure point(s) where CoCs must be at or below the determined target levels (CPC) in the specified media (e.g., soil, ground water, air).

· Point(s) of Verification - A location(s) selected for monitoring to verify a decrease in a CoC as a result of corrective action.

· Precision — A measure of mutual agreement among individual measurements of the same property, usually under prescribed similar conditions expressed generally in terms of the standard deviation. Refer to Appendix E, Data Quality Indicators, for a more detailed definition.

· Quality — The totality of features and characteristics of a product or service that bears on its ability to meet the stated or implied needs and expectations of the user.

· Quality Assurance (QA) — An integrated system of management activities involving planning, implementation, assessment, reporting, and quality improvement to ensure that a process, item, or service is of the type and quality needed and expected by the client.
· Quality Assurance Program Description/Plan — See quality management plan.

· Quality Assurance Project Plan (QAPP) — A formal document describing in comprehensive detail the necessary quality assurance (QA), quality control (QC), and other technical activities that must be implemented to ensure that the results of the work performed will satisfy the stated performance criteria. The QAPP components are divided into four classes: 1) Project Management, 2) Measurement/Data Acquisition, 3) Assessment/Oversight, and 4) Data Validation and Usability. Requirements for preparing QAPPs can be found in EPA QA/R-5.

· Quality Control (QC) — The overall system of technical activities that measures the attributes and performance of a process, item, or service against defined standards to verify that they meet the stated requirements established by the customer; operational techniques and activities that are used to fulfill requirements for quality. The system of activities and checks used to ensure that measurement systems are maintained within prescribed limits, providing protection against "out of control" conditions and ensuring the results are of acceptable quality.

· Quality control (QC) sample — An uncontaminated sample matrix spiked with known amounts of analytes from a source independent of the calibration standards. Generally used to establish intra-laboratory or analyst-specific precision and bias or to assess the performance of all or a portion of the measurement system.

· Quality Management Plan (QMP) — A formal document that describes the quality system in terms of the organization's structure, the functional responsibilities of management and staff, the lines of authority, and the required interfaces for those planning, implementing, and assessing all activities conducted.

· Quality system — A structured and documented management system describing the policies, objectives, principles, organizational authority, responsibilities, accountability, and implementation plan of an organization for ensuring quality in its work processes, products (items), and services. The quality system provides the framework for planning, implementing, and assessing work performed by the organization and for carrying out required quality assurance (QA) and quality control (QC).

· Readiness review — A systematic, documented review of the readiness for the start-up or continued use of a facility, process, or activity. Readiness reviews are typically conducted before proceeding beyond project milestones and prior to initiation of a major phase of work.

· Reasonably Anticipated Future Use - Future land use that can be predicted given current use, local government planning, and zoning.

· Receptors - Persons, structures, utilities, surface water bodies, sensitive habitats, water supply wells, or any living organisms that are, or may be, affected by a release.

· Record (quality) — A document that furnishes objective evidence of the quality of items or activities and that has been verified and authenticated as technically complete and correct. Records may include photographs, drawings, magnetic tape, and other data recording media.

· Recovery — The act of determining whether or not the methodology measures all of the analyte contained in a sample. Refer to Appendix E, Data Quality Indicators, for a more detailed definition.

· Remediation — The process of reducing the concentration of a contaminant (or contaminants) in air, water, or soil media to a level that poses an acceptable risk to human health.

· Representative Concentration:

In Air - The maximum CoC concentration obtained during the most recent sampling event.
In Groundwater - The maximum CoC concentration obtained during the most recent sampling event.
In Soil - The maximum CoC concentration obtained during the most recent sampling event for the ingestion and dermal contact pathways. For the soil reaching groundwater pathway, the average of up to two soil samples with the highest non-zero concentrations from each source area will be used to compare with the screening levels.

·Repeatability - The degree of agreement between independent test results produced by the same analyst, using the same test method and equipment on random aliquots of the same sample within a short time period.

·Reporting limit - The lowest concentration or amount of the target analyte required to be reported from a data collection project. Reporting limits are generally greater than detection limits and are usually not associated with a probability level.

· Representativeness — A measure of the degree to which data accurately and precisely represent a characteristic of a population, a parameter variation at a sampling point, a process condition, or an environmental condition. See also Appendix E, Data Quality Indicators.

·Reproducibility - The precision, usually expressed as variance that measures the variability among the results of measurements of the same sample at different laboratories.

· Risk Assessment - An analysis of the potential for adverse health effects caused by CoC to determine the need for site rehabilitation. Also used to develop target levels or cleanup goals if site rehabilitation is required.

· Risk Reduction - The lowering or elimination of the level of risk posed to human health or the environment through initial response actions, site rehabilitation, or institutional or engineering controls.

· Risk-Based Screening Level (RBSL) - Risk based action level for a CoC based on a 10^{-6} target risk. RBSLs are not site-specific.

· Separation Distance – The vertical distance between the depth of worst-case soil contamination and the depth to the top of the water table.

· Shall - A term denoting a requirement that is mandatory whenever the criterion for conformance with the specification permits no deviation. This term does not prohibit the use of alternative approaches or methods for implementing the specification so long as the requirement is fulfilled.

· Site Assessment - The collection of data on ground-water quality and potential receptors, subsurface geology, hydrology, and site characteristics to determine the extent of the migration of the CoCs and action levels of the CoCs to support remedial action decisions.

· Site Classification - A qualitative risk evaluation of a site based on known or readily available information. Associated with site classifications are initial response actions that are to be implemented simultaneously

with the RBCA process. Sites are re-classified as actions are taken to resolve concerns or as additional information becomes available.

· Site Rehabilitation - A subset of activities conducted to protect human health, safety, and the environment. These activities include recovery of free-product, evaluating risks, evaluating and implementing monitored natural attenuation, making no further action decisions, implementing institutional controls, active remediation, designing and operating cleanup systems and equipment, and monitoring of progress.

· Sensitive Habitat - Fresh and salt-water fisheries, fish habitats including shellfish areas, coastal and inland wetlands, and habitats of threatened or endangered species.

· Site-Specific Target Level (SSTL) - Risk-based corrective action target level for a CoC developed for a particular site under the Tier 2 and Tier 3 evaluations.

· Source Area - Either the location of free-phase hydrocarbons or the location of the highest concentration of the CoC in soil, vapor, or groundwater.

· Spike — A substance that is added to an environmental sample to increase the concentration of target analytes by known amounts; used to assess measurement accuracy (spike recovery). Spike duplicates are used to assess measurement precision.

· Standard Operating Procedure (SOP) - A written document that details the method for an operation, analysis, or action with thoroughly prescribed techniques and steps and that is officially approved as the method for performing certain routine or repetitive tasks.

· Surrogate spike - A pure substance with properties that mimic the analyte of interest. It is unlikely to be found in environmental samples and is added to them to establish that the analytical method has been performed properly.

· Tier I Assessment – Previously known as a Standard Limited Assessment (SLA). A defined scope of work, consisting of three monitoring wells and eight soil borings, to determine soil and groundwater chemicals of concern, hydraulic properties and risk.

· Tier 1 Evaluation - A risk-based analysis where non-site-specific values based on conservative exposure factors (RBSL), potential exposure pathways, and land use are evaluated to determine appropriate actions. An Initial Ground-Water Assessment, Tier I Assessment, or Tier II Assessment may include a Tier 1 Evaluation for soil and ground water, if not previously completed.

· Tier II Assessment – Previously known as a Rapid Assessment (RA). A scope of work proposed by a certified site rehabilitation contractor, consisting of established tasks/components in order to provide a comprehensive risk-based assessment of soil and ground water chemicals of concern, hydraulic properties and risk.

· Tier 2 Evaluation - A risk-based analysis applying the RBSL at the exposure point, development of SSTLs for potential indirect exposure pathways based on site-specific conditions, and establishment of point(s) of compliance. A Tier I Assessment or Tier II Assessment may include a Tier 2 Evaluation for vapor, soil, and ground water, if not previously completed.

· Tier III Assessment – A scope of work proposed by a certified site rehabilitation contractor, consisting of established tasks/components in order to further refine the site specific target levels for potential and indirect exposure pathways established from a previously completed Tier II Assessment. A Tier III Assessment would typically incorporate a more sophisticated fate and transport model. Additional monitoring point(s) to further define the geological conditions or collect additional data may also be needed to refine other naturally occurring conditions at the facility or receptor(s). As the Department typically performs modeling, Tier III Assessments are not commonly performed.

· Tier 3 Evaluation - A risk-based analysis to develop values for potential direct and indirect exposure pathways at the exposure point based on site-specific conditions. A Tier II Assessment may include a Tier 3 Evaluation for vapor, soil, and ground water. The following table gives a comparison of the three tier evaluations:

Item		Tier 1 Evaluation	Tier 2 Evaluation	Tier 3 Evaluation
Screening Levels		RBSLs	RBSLs/SSTLs	RBSLs/SSTLs
Representative Concentrations –Air		Maximum CoC Concentrations	Maximum CoC Concentrations	Maximum CoC Concentrations
Representative Concentrations - Soil	Ingestions, Inhalation & Dermal Contact	Maximum CoC Concentrations	Maximum CoC Concentrations	Maximum CoC Concentrations
	Leachate	Maximum Concentration or average of samples	Maximum Concentration or average of samples	Maximum Concentration or average of samples
Representative Concentrations – Water		Maximum CoC Concentrations	Maximum CoC Concentrations	Maximum CoC Concentrations
Target Risk		1×10^{-6}	1×10^{-6}	1×10^{-6} or as approved
Hazard Quotient		1	1	1 or as approved
Exposure Factors		Not Applicable	Not Applicable	Default or Site-specific
Fate & Transport		Not Applicable	Domenico or equivalent	Numerical Models
Leachate		Not Applicable	Leachability Model	Leachability or other
Air		Not Applicable	Vapor Models	Vapor Models
Main Steps		Compare RBSLs, Site Conceptual Exposure Model, Receptors, Data requirements	Establish: Exposure Points, Points of Compliance and SSTLs	Further refine SSTLs based on additional data & modeling
Locations where RBSLs are applied		Source Area(s)	Exposure Point(s)	Exposure Point(s)
Data Collection		Source Area Characterization	Complete Plume Delineation	Detailed site-specific biodegradation study
Outcome of Evaluation		NFA, Tier 2 Evaluation, Emergency Action	NFA, CNFA, Corrective Action, Tier 3 Evaluation	CNFA, NFA, Corrective Action

Table 1 Comparison of the Tiers

· Trip blank - A clean sample of a matrix that is taken to the sampling site and transported to the laboratory

for analysis without having been exposed to sampling procedures.

· Validation — Confirmation by examination and provision of objective evidence that the particular requirements for a specific intended use have been fulfilled. In design and development, validation concerns the process of examining a product or result to determine conformance to user needs. See also Section D.

· Variance (statistical) — A measure or dispersion of a sample or population distribution.

· Verification — Confirmation by examination and provision of objective evidence that specified requirements have been fulfilled. In design and development, verification concerns the process of examining a result of a given activity to determine conformance to the stated requirements for that activity. See also Section D.

Introduction

Environmental data are critical to decision-making concerning the protection of the public and the environment from the adverse effects of pollutants from leaking underground storage tanks. Environmental data are key to decisions and actions pertaining to environmental protection efforts in the air, land, and waters of the state. The success of environmental technology in abating pollution or remediation of sites depends upon proper design, construction and operation. Quality assurance (the documentation of quality control) and quality control practices are needed to ensure that data involving all environmental efforts - pollution abatement, cleanup, public health protection, and environmental technology - successfully perform their intended role.

Quality Assurance Policy

The UST Management Division of the SCDHEC Bureau of Land and Waste Management adopts by reference the following Quality Assurance Policy statement as documented in the Environmental Quality Control QMP.

It is the quality assurance policy of the Department that there will be sufficient QA activities conducted to demonstrate that all environmental data generated, processed, or used will be scientifically valid, legally defensible, and of known and acceptable precision and accuracy. It is also the Agency policy that documented precision and accuracy information is available upon request for all reported data. Data shall be complete, representative, and comparable. The quality of all data generated by and for SCDHEC shall meet or exceed all EQC and EPA program requirements.

A3 Distribution List

The South Carolina DHEC Underground Storage Tank Management Division Quality Assurance Project Plan, and subsequent revisions thereof, will be distributed to the following:

Name	Title	Organization/Address	Telephone Number	Fax Number	Email Address
Harbhajan Singh	Project Officer	UST Section, USEPA Region 4, 61 Forsyth St., SW, Mail Code 9T25, Atlanta, GA, 30303	404-562-8473	****	Singh.harbhajan@epa.gov

Name	Title	Organization/Address	Telephone Number	Fax Number	Email Address
Channing Bennett	Environmental Scientist	UST Section, USEPA-Region 4, 61 Forsyth St., SW, Mail Code 9T25, Atlanta, GA, 30303-8960	404-562-8474	****	Bennett.Channing@epa.gov
Danny France	Quality Assurance Manager	USEPA - Region 4 980 College Station Road Athens, GA 30605	706-355-8738	****	France.Danny@epa.gov
Bill Truman	Director	UST Section, USEPA-Region 4, 61 Forsyth St., SW, Mail Code 9T25, Atlanta, GA, 30303-8960	404-562-9457	****	Truman.William@epa.gov
Nydia Burdick	QA Officer	SCDHEC, OQA PO Box 72 State Park, SC 29147	803-896-0862	803-896-0850	burdicnf@dhec.sc.gov
Daphne Neel	Chief	SCDHEC, UST Management Division, 2600 Bull St., Columbia, SC, 29201	803-896-4007	803-896-4001	neeldg@dhec.sc.gov
Stan Clark	ABC	SCDHEC, UST Management Division, 2600 Bull St., Columbia, SC, 29201	803-896-6258	803-896-4001	clarksl@dhec.sc.gov
Don Siron, PG	Director	SCDHEC, UST Management Division, 2600 Bull St., Columbia, SC, 29201	803-896-4089	803-896-6245	sirondl@dhec.sc.gov
Eric Cathcart	Manager	Compliance & Regulatory Assistance Section, SCHDEC, UST Management Division, 2600 Bull St., Columbia, SC, 29201	803-896-6847	803-896-6245	cathcaef@dhec.sc.gov
Mark Berenbrok	Project Manager UST Fields	SCDHEC, UST Management Division, 2600 Bull St., Columbia, SC, 29201	803-896-6848	803-896-6245	berenbmk@dhec.sc.gov
Christopher Doll, PG	Manager	Assessment Section, SCDHEC, UST Management Division, 2600 Bull St., Columbia, SC, 29201	803-896-6585	803-896-6245	dollcs@dhec.sc.gov
Lee Monts	Manager	Corrective Action Section, SCDHEC, UST Management Division, 2600 Bull St., Columbia, SC, 29201	803-896-6677	803-896-6245	montsla@dhec.sc.gov
TBD –listed in the Addendums	Project Managers	Assessment and Corrective Action Division, SCDHEC, UST Management Division, 2600 Bull St., Columbia, SC, 29201	803-896-6241	803-896-6245	-----
SC Certified UST Site Rehabilitation Contractors*		This will be covered in the contractor's addendum to this Programmatic QAPP.			

Table 2 Distribution List

* Copies of the QAPP will be provided to all SCDHEC Certified UST Site Rehabilitation Contractors. It will be the responsibility of those contractors to provide the QAPP to any analytical laboratories or other subcontractors that they utilize.

The site-specific QAPP addendums will also have a distribution list of those personnel specific to the project that will be receiving a copy of the Master UST QAPP and the site-specific addendum. Personnel will be require to sign that they have received a copy of the most recent UST Programmatic QAPP and the site-specific QAPP Addendum.

A4 Organization

To implement this QA Program Plan, the UST Management Division has established a suitable management structure. Personnel from the Underground Storage Tank (UST) Management Division and Land and Waste Management of South Carolina Department of Health and Environmental Control (SCDHEC) will provide technical management and oversight of the site assessment work to be performed. Management and support personnel involved should be qualified, by training and/or expertise, to assume the necessary responsibilities. The successful implementation of the QA Program Plan involves a large educational component and cannot be accomplished in a brief time period.

Below are listed the responsibilities for key positions. The site-specific QAPP addendum will list roles with specific responsible parties as well as have its own organizational chart. The Addendum may also list additional roles depending on the scope of the project and the contractor.

The responsibilities of the participants are as follows:

1. **EQC Quality Assurance Management Officer -** The Manager of Office of Quality Assurance (QA) is responsible for the oversight of all quality assurance activities associated with SCDHEC sampling and analysis standard operating procedures (SOPs). The QA Manager reports directly to upper management. The QA Manager will resolve any issues when corrective actions are needed to address data quality issues involving SCDHEC staff and SOPs. The QA Manager will approve the SCDHEC UST Programmatic QAPP. While the QA Manager will not review the addendums, the SCDHEC project officers will have guidance to ensure what is in the QAPP addendums is correct and complete.

2. **UST Management Division QAPP Manager -** The UST Management Division QAPP Manager is responsible for revisions to the UST Programmatic QAPP as necessary. The UST QAPP Manager will ensure that copies of the QAPP and all revisions are distributed to all parties listed in the Distribution List

3. **Division Directors -** The Division Directors will provide necessary liaison with the QA Manager and the Regional Office to help ensure that UST QA Program requirements are consistently met within the state.

4. **Section Managers -** Section Managers are responsible for oversight of the project managers. The Section Managers provide input to site-specific decisions in addition to ensuring consistency with policies and procedures of the UST Management Division. Section Managers will address QA matters with the Project Managers and the contractors at the site level and will approve site-specific QAPPs.

5. **Technical Project Managers -** Technical Project Managers are responsible for direct oversight of contractors conducting assessment and site rehabilitation of releases at UST sites. Project managers perform day-to-day review of plans and reports related to site rehabilitation activities on their assigned sites. These reviews include verification and analysis of data submitted to the UST Management Division by site rehabilitation contractors and analytical laboratories and recommendations for future work. Project Managers are responsible for the review of and approval of the site-specific QAPPs to ensure compliance with the UST Master QAPP. The Project Managers are also responsible for validating the Project Data.

6. **Site Rehabilitation Contractor -** The Site Rehabilitation Contractor is an independent contractor responsible for managing and coordinating field and office activities needed for assessments or cleanup. Site rehabilitation contractors that perform activities involving data analysis and interpretation must be registered with SCDHEC as a Class One Site Rehabilitation Contractor. Site rehabilitation contractors that perform activities involving only data collection (e.g., drilling, sampling) must be registered with SCDHEC as a Class Two Site Rehabilitation Contractor. The Contractor is also responsible for verifying the Project Data.

7. **Analytical Laboratory -** The Analytical Laboratory receives the soil and water samples from the site rehabilitation contractor, performs the requested analyses, and provides analytical reports. Analytical laboratories must be certified by the SCDHEC Office of Laboratory Certification for the analytical methods performed. http://www.scdhec.gov/administration/regs/docs/61-81.pdf. Personnel performing field analyses must also work for certified laboratory unless a steady state condition is being assessed and the field parameters will not be reported.

8. **Soil Boring and Monitoring Well Driller -** The Driller installs soil borings and monitoring wells for the Site Rehabilitation Contractor. All monitoring wells are installed by a certified South Carolina well driller in accordance with South Carolina Well Standards R.61-71 (http://www.scdhec.gov/environment/water/regs/r61-71.pdf).

Organization Chart for SCDHEC UST

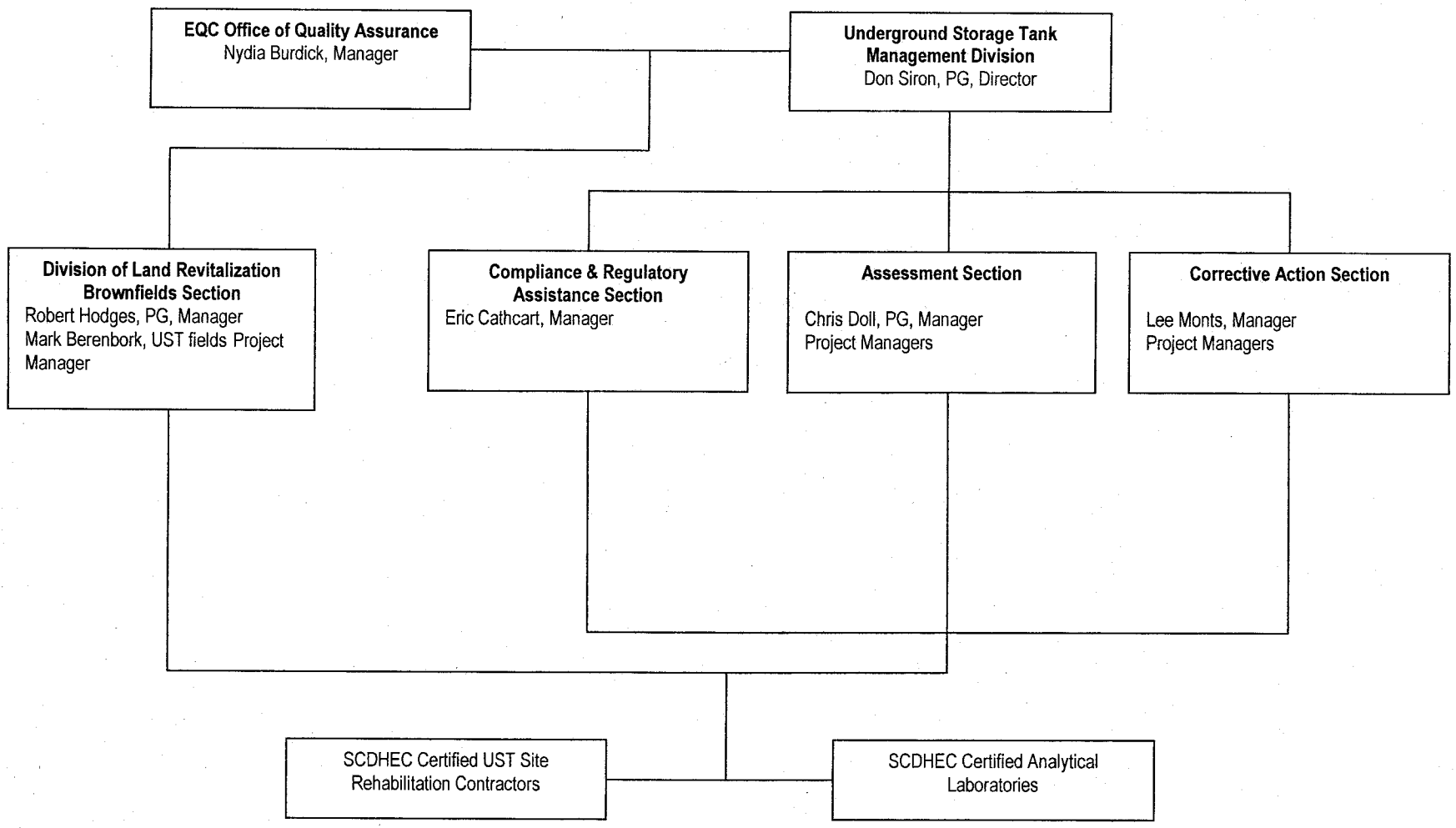

Figure 1 Organizational Chart

A5 Problem Definition/Background

Approximately 9,000 releases have been reported from regulated underground storage tanks (UST) in South Carolina. The UST Management Division addresses the chemicals released from leaking USTs. The petroleum chemicals of concern present in the soil and groundwater constitute potential risks to human health and to the environment and require investigation in order for decisions to be made regarding appropriate levels of site rehabilitation or possible closure. All such decisions must be technically defensible and must be protective of human health and the environment. It is the intent, and shall be the policy of, the UST Management Division to investigate all leaking UST sites in a consistent fashion, to ensure that the responsible party acts in an expeditious manner to perform the appropriate site assessment and, where circumstances dictate, designs a satisfactory remediation plan. The UST Management Division will utilize the decision-making flow chart in Appendix A in determining what actions need to be completed at a site.

It shall be the policy to treat each leaking UST site on a case-by-case basis. The Project Manager assigned to the site ensures progress on legal and routine actions, and decides on the degree of remediation required based on several factors. The primary factor to be considered will be whether a direct threat to human health or the environment currently exists. Such cases will receive top priority, and direct action will be taken to protect the public. Where necessary at a minimum, free phase product removal will be required wherever encountered. It shall be the goal of the UST Management Division to clean the groundwater to site-specific target levels based on current and all potential receptors as measured by the sampling of monitoring wells throughout the CoC plume.

Because every site will be treated on a case-by-case basis, the programmatic QAPP will be appended with specific site information. These appendixes will be developed by the contractor along with SCDHEC personnel. The Project Manager will ensure that all required information from the site is addressed in the addendum. Information will include a site map with the sampling sites indicated, the history of the site, the number of samples to be collected, when the sampling will take place, the Laboratory that will be used along with their SCDHEC Laboratory Certification Number, and who will collect the samples. The QAPP Addendum will be submitted to the UST Project Manager for approval at least 15 business days before sampling is to commence. The Addendum must be approved before site work begins. The UST Management Division in conjunction with the Office of Quality Assurance (OQA) has developed a format for these addendums. See Appendix B of this QAPP.

The policy of the UST Management Division is and will be to collect water and soil quality data that is scientifically valid, defensible, and of known accuracy. The UST Management Division presently uses existing guidance and the procedures outlined in this plan to ensure that investigations are accurately conducted and defensible in an administrative proceeding. Contractors certified by the Department to perform leaking UST investigations are required to submit a QA/QC plan and a site-specific Quality Assurance Project Plan (QAPP) based on EPA QA/R-5 and this document, the UST Programmatic QAPP, prior to engaging in site activities.

A6 Project Description

The Programmatic QAPP for the UST Management Division is presented in this document and describes the plan of action for South Carolina leaking UST site activities. Some specific site activities which will generate and/or affect environmental data include soil and water sample collection and analysis; soil boring and monitoring well installation; decontamination procedures; groundwater, geophysical, and other survey measurements; and data reduction and analyses. Site-specific QAPPs will present information specific to the site including location, topography, work schedules including the start and completion dates, and resource constraints.

All releases are prioritized in accordance with the ranking system outlined in Step 2 Site Priority Classification below. Releases qualified for funding from the SUPERB Account are funded in order of relative risk based upon availability of funds in the SUPERB Account. All other releases are investigated as rapidly as possible, depending upon the tank owner's ability to conduct necessary site rehabilitation activities. Each of the releases is unique depending on its components, the type of product stored, the local hydrogeologic conditions and the history of the release. In addition, releases exist in virtually every type of South Carolina community, ranging from rural to metropolitan. At any South Carolina facility where a leak from a UST has occurred, the staff of the UST Management Division is responsible for ensuring that all site activities are performed in accordance with the quality assurance procedures and requirements of this QAPP.

Initial investigations are conducted using standardized scopes of work (Initial Groundwater Assessment, Tier I Assessment) that provide sufficient data on the extent and severity of contamination and the location of proximate potential receptors to allow preliminary ranking of the risk presented by a release and determination of subsequent scopes of work. Comprehensive investigations of releases that will require site rehabilitation are conducted in accordance with the Tier II Assessment work scope. The Tier II work scope provides a systematic approach to obtaining all of the data necessary to fully characterize the extent and severity of a release and determine its potential risk to human health and the environment. The site rehabilitation process outlines the data gathering necessary to document the progress and completion of site rehabilitation for petroleum releases. The UST Management Division will utilize a decision-making flow chart (Appendix A) to determine what scope of work is to be conducted at a site. On any course of action involving sample collection, the UST Contractor will be required to submit an addendum to this QAPP specifying site related information (see Appendix B). This information will include site selection, work schedules, geographical locations, and time or resource constraints since this information is so specific for each project/site.

These and all other pertinent site activities that will generate environmental data will be subject to QAPP requirements. Potential uses for collected environmental data include estimating of the magnitude and extent of contamination, characterization of site conditions for development of remedial action procedures, and documentation of effectiveness of remediation.

The primary goal of the quality assurance program outlined in this document is to ensure that all data generated by or for the SCDHEC UST Management Division which relates to UST site activities will be scientifically valid, legally defensible, and of known and acceptable precision and accuracy. Specific objectives of the quality assurance procedures include the following:

- All data generated for or by the UST Management Division will be of sufficient or greater quality to withstand scientific and legal challenge

- The intended use of all data will be determined before data collection efforts begin to ensure that the necessary levels of data quality are attainable
- All sample collections and analysis are project specific and will be defined in investigation work plan
- All data produced for or by the UST Management Division will be of known and acceptable precision, accuracy, representativeness, completeness, and comparability.
- All projects will receive adequate supervision by the UST Management Division staff to ensure quality data is collected

The UST Management Division will track the progress of work at UST sites through monitoring reports. Generally, groundwater monitoring is required on a quarterly or semiannual basis. Groundwater monitoring and reporting frequencies are adjusted in some cases depending on the severity of the groundwater contamination.

Below is a list of events that must take place for each type of work beginning with the Initial Ground Water Assessment through the Tier II Assessment. Actual project dates will be included in the Contractor's Amendments.

Risk-Based Corrective Action (RBCA) Procedures:

In response to releases from USTs, owners/operators must take certain initial abatement steps: prevent further releases, control fire and explosion hazards, and remove free product pursuant to the UST Control Regulations, R. 61-92. Investigation plans, RBCA evaluation reports, Site Rehabilitation Plans, and Engineering Reports must be approved by SCDHEC, as necessary, and in accordance with applicable guidance and regulations. All site rehabilitation activities related to UST releases must be performed by a SCDHEC certified site rehabilitation contractor as required by the State Underground Petroleum Environmental Response Bank (SUPERB) Fund Access and Site Rehabilitation Regulations, R. 61-98.

THE RBCA PROCESS

The RBCA process is depicted in Appendix A. This flow chart is an illustrated decision making process based on both observation and data from the site of the Leaking UST. This decision making process is based on the extent of the contamination of the Leaking UST as well as the impact to human health. Below the steps of the RBCA Process are laid out in text form and includes a discussion of what elevates the site from "no further action required" to a Tier I or Tier II Assessment.

1 - SITE ASSESSMENT

The information necessary for determining if emergency action is appropriate and for comparing concentration of CoCs to the RBSL must be obtained. The Initial Ground-Water Assessment (IGWA) and Tier I Assessment work scopes outline the minimum information necessary for completion of soil and groundwater assessment and a Tier 1 risk evaluation. In general, the information to be obtained during the Tier 1 evaluation may include:

- A review of historical records of site activities and past releases;

- Quantification of the CoC in soil and groundwater.

For petroleum releases, based on toxicity, mobility, persistence, and presence in material released, selected CoCs are:

For all gasoline, diesel, kerosene: benzene, toluene, ethylbenzene, xylenes, MTBE, 1,2-Dicholoroethane, PAH's (total naphthalene, benzo(a)anthracene, benzo(b)fluoranthene, benzo(k)flouranthene, chrysene, and dibenz(ah) anthracene), oxygenates (Ethyl tert-butyl ether, ethyl tert-butyl alcohol, tertiary-amyl methyl ether, diisopropyl ether, tert-butyl formate, tert-butyl alcohol, tert-amyl alcohol, and ethanol). EDB and lead will be investigated if tanks were in operation prior to 1991;

For used oil add: arsenic, barium, cadmium, chromium, lead, mercury, selenium, and silver;

- Quantification of biological indicator parameters such as dissolved oxygen, nitrate, ferrous iron and sulfate;
- Location of primary source(s) of CoCs: - USTs, product lines, dispensers, service bays, etc.;
- Location of secondary source(s) of CoCs: - free-product, soil with concentrations above RBSLs, etc.;
- Location of maximum concentration of CoCs in soil and ground water;
- Determination of regional or site-specific hydrogeologic conditions (e.g., depth to ground water, flow direction, gradient, ambient ground water quality, ground-water flow velocity);
- Location of current and reasonable future receptors within 1,000 feet of the site. All drinking water wells within a radius of 250 feet of the site for Initial Groundwater Assessment, 500 feet of site for Tier I Assessment, and 1,000 feet for Tier II Assessment shall be sampled for appropriate CoCs;
- Identification of potential significant transport and exposure pathways. A complete exposure pathway includes: 1) a source and mechanism for CoC release into the environment, 2) a transport medium (e.g., air, soil, ground water, vapor migration through soil and utilities) for the CoC to move from the source to the receptor, 3) a point of potential contact of the receptor with the medium (points of exposure such as drinking water wells, surface water bodies), and 4) an exposure route or means for taking the CoC into the body (e.g., ingestion, inhalation, dermal contact);

Determination of current and reasonably anticipated future use of the property, ground water, surface water, and sensitive habitats for the site and adjacent properties. Use of property shall be determined based on factors such as: zoning laws; comprehensive infrastructure such as transportation and public utilities; site location in relation to urban, residential, commercial, industrial, agricultural, and recreational areas; Federal/State land use designation; historical or recent development patterns; and location of wellhead protection areas;

- Documentation, if available, of the changes in concentration of CoCs over time (i.e., stable, increasing, decreasing);

- Documentation, if appropriate, of concentration of CoCs measured at point(s) of exposure (e.g., concentration of CoCs in a nearby drinking water well, vapor concentration of CoCs in nearby utilities); and

- Collection of air or water quality samples, as appropriate, from any receptor (well, underground structure, water body) that has a potential of being impacted by virtue of its proximity to the source.

2 - SITE PRIORITY CLASSIFICATION

Based on initial release information and subsequently upon completion of each tier evaluation, the release is classified by DHEC into categories based on the current and projected degree of risk to human health and the environment. Prioritization/classification is an on-going process based on available information. Releases may be reclassified subsequent to abatement, further assessment information, and remedial actions. Typical release scenarios and response actions to eliminate any immediate threat are provided in Table 3. Emergency Action to eliminate immediate exposure is required. The Underground Storage Tank Management Division should be notified at (803) 896-6241 or, when necessary, an emergency can be reported directly to the Emergency Response Program at 1-888-481-0125 or (803) 253-6488. Appropriate actions must be implemented as soon as possible to eliminate an immediate threat.

Classification 1: The highest priority classification is for those releases that pose an immediate threat to human health and the environment. Sites are placed in Classification 1 if:

- An emergency situation exists
- A fire or explosion hazard exists
- Vapors or free product exists in a structure or utility
- Concentrations of CoC have been detected in a potable water supply or surface water supply intake
- Free product exists on surface water
- CoC exists in surface water

Classification 2: is the second priority classification. This Classification is for those releases that pose a significant near term (0 to 1 year) threat. This Classification is further subdivided into 2a and 2b. Sites are place in Classification 2 if:

Classification 2a:

- A significant near term (1 to 1 year) threat to human health, safety, or sensitive environmental receptors exists
- Potable supply wells or surface water supply intakes are located < 1-year ground water travel distance downgradient of the source area.

Classification 2b:

- Free product exists in a monitoring well at a measured thickness > 1 foot.
- Potable supply wells or surface water supply intakes are located < 1000 feet downgradient of the source area (where ground-water velocity data is not available.

Classification 3: The third priority classification is for those releases where there is a short term (1 to 2 years) threat. This is also subdivided in to 3a and 3b. Sites are placed in Classification 3 if:

Classification 3a:

- A short-term (1 to 2 years) threat to human health, safety, or sensitive environmental receptors exist.
- Potable supply wells or surface water supply intakes are located > 1year and < 2 years ground-water travel distance down-gradient of the source area.
- Sensitive habitats or surface water exist < 1 year ground-water travel distance down-gradient of the source area and the ground water disc

Classification 3b:

- Free product exists in a monitoring well at a measured thickness > 0.01 feet.
- Concentrations of CoC above the RBSL have been detected in a non-potable water supply well.
- Hydrocarbon-containing surface soil (< 3 feet below grade) exists in areas that are not paved.
- Sensitive habitats or surface water used for contact recreation exist < 500 feet downgradient of the source area (where ground-water velocity and discharge location data are not available).
- The site is located in a sensitive hydrogeologic setting, determined based on the presence of fractured or carbonate bedrock hydraulically connected to the impacted aquifer.
- Ground water is encountered <15 feet below grade and the site geology is predominantly sand or gravel.

Classification 4: the fourth priority classification is for those releases where there is a long term (> 2 years) threat to human health or the environment. This Classification is also subdivided into 4a and 4b. Sites are put in Classification 4 if:

Classification 4a:

- A long term (>2 years) threat to human health, safety, or sensitive environmental receptors exists.
- Potable supply wells or surface water supply intakes are located > 2 years and < 5 years ground-water travel distance, downgradient of the source area.
- Non-potable supply wells are located < 1 year ground water travel distance downgradient of the source area.

Classification 4b:

- Free product exists as sheen in any monitoring wells.
- Non-potable supply wells are located < 1000 feet downgradient of the source area (where ground water velocity data is not available).
- The ground water is encountered < 15 feet and the site geology is predominantly silt or clay.

Classification 5: The fifth priority classification is for releases that do not meet any of the characteristics of the earlier priorities, or where there is no current demonstrable threat to human health or the environment but where data indicate CoC concentrations are above the RBSLs and further assessment is needed. Groundwater travel times are calculated from the monitoring well closest to the exposure point that contains concentration of CoCs above the RBSLs. Sites are placed in Classification 5 if:

- There is no demonstrable threat, but additional data are needed to show that there are no unacceptable risks posed by the site.
- Assessment data for the site indicate concentrations in some samples are above the RBSL or SSTL, as appropriate and further assessment is needed.
- Assessment data for the site indicate concentrations in sample are below the RBSL or SSTL, as appropriate, but he samples are determined not to be representative, therefore, further assessment is needed.

Scenario	Potential Initial Response
Explosive levels or concentrations of vapor are present in a residence or other building	Evacuate occupants; begin abatement measures such as ventilation.
Explosive levels are present in the subsurface utility system	Evacuate immediate vicinity; begin abatement measures such as ventilation.
Free-phase product is present in significant quantities at ground surface, on surface water bodies, or in utilities.	Prevent further free-phase product migration, institute recovery, monitor vapor concentrations.
An active water supply well, water supply line, or public water is impacted or immediately threatened.	Notify users, provide alternate water supply, and treat water point of use.
A sensitive habitat or sensitive resources are impacted.	Minimize extent of impact by containment measures and implement habitat management to minimize exposure.

Table 3 Potential Initial Response Actions to Eliminate Immediate Threat for Typical Release Scenarios

TIER 1 EVALUATION

Data obtained from a Tier I Assessment requires three sub-steps to complete the Tier 1 Evaluation: 1) comparison with the RBSL, 2) the development of a site conceptual exposure model, and 3) identification of data required to characterize the complete and potential pathways identified in the site conceptual exposure model. A complete exposure pathway exists where a mechanism allows a receptor to be exposed to the CoC.

Data obtained from an IGWA allows comparison of CoC concentrations to the soil and ground water RBSLs to determine if additional a Tier 1 or Tier 2 evaluation is required.

1 - Comparison with RBSL

For a Tier 1 Risk Evaluation, it is assumed that all exposure points are located in or near the source area. CoC concentrations should be compared with the values provided in the RBSL Look-Up Tables in Appendix C for the ground-water ingestion, soil leaching to ground water, vapor inhalation, and soil ingestion pathways. For other chemicals of concern not included in Appendix C, the RBSLs may be calculated based on a carcinogenic risk of 10^{-6} and a hazard index of 1. As the toxicity of Total Petroleum Hydrocarbon (TPH) analyses cannot be quantified, it cannot be used in the risk decision-making process.

Each CoC is evaluated separately for each exposure route, as SCRBCA does not consider the additive effect of risk from different CoCs and different routes of exposure.

Representative concentrations of CoCs in affected media are determined by the following:

- **Air:** The maximum CoC vapor concentration obtained during the most recent sampling event should be used. Historical sampling events can be used to establish trends.

- **Ground Water:** The maximum CoC concentration obtained during the most recent sampling event should be used. Historical sampling events can be used to establish trends.

- **Soil:** The maximum CoC concentration obtained during the last sampling event should be used for the ingestion and dermal contact pathways. For the soil leaching to ground water pathway, the average of two soil sample results or highest single sample with the highest non-zero concentrations from each source will be compared with RBSLs.

2 - Site Conceptual Exposure Model

A site conceptual exposure model uses information about the following to identify all complete and potential exposure pathways:

Release information:

- Pertinent release information may include, but is not limited to: the historical use of the property where the release occurred, the approximate age of the release, and the properties of the CoC (e.g., solubility, volatility) that were released.

Characteristics of the site:

- Pertinent site characteristics may include, but are not limited to: geology to include the soil type, depth to bedrock, depth to groundwater, bulk density, porosity, water content, hydraulic gradient, ground-water flow direction, seepage velocity, fractional organic carbon and the physical distribution of each CoC around the source.

Proximity of potential receptors and their characteristics:

- The construction specifications (e.g., depth, diameter, and material of construction of a private well or storm sewer) of all potential man-made receptors should be identified.
- Location of all natural receptors (e.g., rivers, lakes, marshes, etc.) within 1,000 feet.
- Current land use of all affected properties:
- For each property that is impacted, may potentially become impacted, or is adjacent to a potentially impacted property, the current land use should be identified (e.g., vacant lot, restaurant, school, residence, factory).

Applicable zoning or land use ordinances:

- The local city or county administrative authorities should be contacted for information pertaining to any restrictive zoning and land use ordinances. Zoning ordinances set broad-scale restrictions on property development such as residential, commercial, or industrial. Land use ordinances may establish smaller scale restrictions such as disallowing the installation of drinking water or irrigation wells. A photocopy of the applicable sections of the ordinances should be provided. If a copy cannot be obtained, the ordinance number and the name, phone number, and business address of the appropriate city or county authorities should be provided with the relevant information.

Based on the estimated age of the release, known distribution of the CoCs, and the potential for migration, all complete and potential exposure pathways should be identified and summarized for land use (current and future conditions). For example, drinking water wells may not currently exist but ground water may reasonably become a source of irrigation or drinking water. The following potential exposure pathways should be considered for evaluation:

- **Air**
  - inhalation of ambient vapors
  - explosive hazard

- **Surface Water (e.g., lake, river, stream, ditch, marsh)**
  - ingestion
  - dermal contact
  - volatile inhalation

- **Ground Water**
  - ingestion
  - dermal contact
  - volatile inhalation

- **Surficial Soil** (impacted soil located <3 feet below land surface or exposed at surface)
  - ingestion
  - dermal contact
  - volatile inhalation
  - leaching to ground water

- **Subsurface Soil** (impacted soil located >3 feet below land surface)
  - ingestion (during excavation)
  - dermal contact (during excavation)
  - volatile inhalation (during excavation)
  - leaching to ground water

Exposure routes and pathway summarization for the site conceptual model are shown in Appendix D.

3 - Identify Data Requirements

For each complete or potential exposure pathway identified in the site conceptual model, identify the data necessary to characterize the migration potential along the pathway and to quantify the potential impact. For example, if the accumulation of vapors in a utility is a concern, data may be appropriate to characterize the transport of the CoC from the source to the utilities via ground water, the extent of volatilization from the ground water, the transport of vapors from the ground water to the utility, and the construction specifications (material of construction and types of seals) of the utility. These data requirements would then become an integral part of a Tier II assessment. The site conceptual model format for various media of exposure should be summarized in the tables given in Appendix D and included in the final report as required in Section A9 of this document.

TIER 1 ACTION

Once the Tier 1 evaluation or Tier I assessment is completed, three decision options are available for consideration based on the CoC concentrations:

1 - No Further Action

If the representative concentrations (please see step 3 for an explanation of the representative concentrations) of the CoCs are below the RBSLs, further assessment and/or cleanup is not necessary. Please see the no further action option in Step 13.

2 - Emergency Action

Typical release scenarios and response actions to eliminate any immediate threat are provided in Table 3. Emergency Action to eliminate immediate exposure is required. The Underground Storage Tank Management Division should be notified at (803) 896-6241, or when necessary, an emergency can be reported directly to the Emergency Response Program at 1-888-481-0125 or (803) 253-6488. Appropriate actions must be implemented as soon as possible to eliminate an immediate threat.

3 – Concentration above RBSLs

If the concentrations of the CoCs are above the RBSLs, a Tier 2 investigation using a Tier II Assessment is warranted under the following conditions:

- If the SSTL developed under the Tier 2 investigation are anticipated to be significantly different from the Tier 1 RBSL (concentration of CoC exceeds the RBSL but it is predicted that the use of site-specific data will allow different site-specific cleanup goals to be determined);
- If the cost of remedial action to reach RBSL will likely be greater than Tier 2 evaluation (data collection, analysis, review, etc.) and subsequent remedial action;
- Free phase product is present; and

- The approach or assumptions used to derive the Tier 1 goals are not appropriate for conditions at the site.

TIER II ASSESSMENT

If Tier II assessment is warranted to fully evaluate the current and future exposure pathways identified in the site conceptual model, a Tier II Assessment Plan to conduct a Tier 2 evaluation should be submitted. A Tier II Assessment includes:

- determination of geology;
- determination of the site-specific hydrologic conditions;
- determination of extent of free-phase product;
- determination of horizontal and vertical extent of each CoC above the RBSL, as appropriate;
- determination of changes in concentrations of each CoC over time (i.e., increasing, stable, or decreasing with time);
- determination of concentrations of each CoC measured at exposure points (e.g., in a nearby drinking water well, vapor concentration of nearby utilities); and
- evaluation of fate and transport of each CoC.

Additional site assessment may be required to fully evaluate the current and future exposure pathways identified in the Tier 1 evaluation. The Tier II Assessment document outlines a comprehensive site assessment approach for obtaining the additional information necessary for a Tier 2 evaluation.

TIER 2 EVALUATION

The Tier 2 risk evaluation consists of three sub-steps: 1) establishing exposure point(s), 2) establishing the site-specific points of compliance, and 3) calculating the corresponding SSTL for each CoC for identified points of compliance and verification.

1 - Establish the exposure point(s)

An exposure point is that point at which it is assumed that a receptor (either actual or potential) can currently or in the future come in contact with the CoC. Exposure points may include, but are not limited to:

- private and public water supply wells;
- irrigation wells;
- surface water bodies (e.g., lakes, streams, rivers);

- sensitive habitats (e.g., wetlands, fisheries, shellfish areas); and
- underground utilities, building basements, etc.

Note: All current or future exposure pathways should be considered for each CoC.

An exposure pathway is the course that the CoC takes from the source to a receptor. To determine if the pathway is complete, the Tier 2 Risk Evaluation must provide sufficient information to identify the source and the transport mechanisms to the exposure point. For example, if a CoC reaches an underground utility, the construction material (e.g., PVC, ductile iron, etc.) of the underground utility and the types of seals (e.g., glue, neoprene, etc.) at the pipe couplings should be identified and used to determine if a potential exists for the CoC to enter those lines resulting in an exposure to the receptor. However, if utilities are at three feet below land surface and groundwater is at 35 feet, a complete exposure pathway probably does not exist. For a given medium and exposure route, if a risk does not exist for a selected pathway then the exposure point should not be further evaluated.

For the ground water ingestion pathway, the exposure point must be established based on current and reasonably anticipated future use of the ground water. Table 4 gives examples of exposure points for various possible situations. Please refer to STEP 3 Site Conceptual Exposure Model for details on how to identify if the adjacent property is a possible exposure point.

2 - Establish Point(s) of Compliance

A point of compliance is a location selected between the source area (area of maximum concentrations) and the exposure point where the concentration of each CoC must be at or below the Compliance Point Concentration (CPC). Typically the CPC is between the SSTL at the source area and RBSL applied at the exposure point. Points of compliance should be established down gradient of the source area but hydraulically up gradient of an exposure point. At least one point of compliance must be located between the source area and the exposure point for each completed pathway, with a minimum of one-year travel time for the CoC from the point of compliance to the exposure point. Additional point(s) of compliance are necessary where complex hydrogeological conditions exist that may control CoC migration.

When establishing point(s) of compliance the following factors must be considered:

- locations of current receptors;
- locations of potential receptor(s);
- current and projected land and resource usage; and
- velocity of the CoC in soil, ground water or air.

Site Status	Down gradient offsite property status	Exposure Point should be located	Figure
Actual or potential source of water	Source of water or not	At source area	2a
Within the radius of influence of a pumping well	Source of water or not	At the edge of the well's radius of influence	2b
No Exposure Point on the property	Off site is a source of water	Closest offsite property boundary	2c
No Exposure Point on the property	Off site is not a source of water	Hydraulically up gradient of a potential receptor	2d

Table 4 Choice of Exposure Points

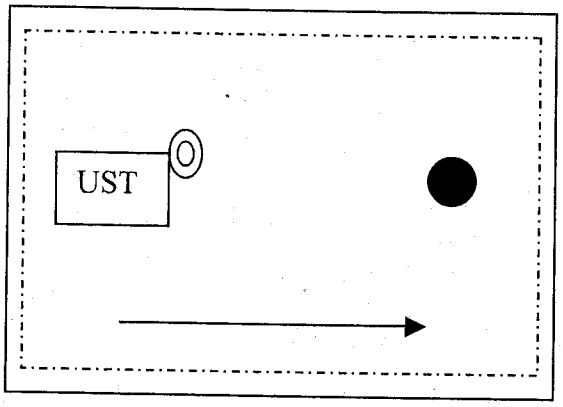

Figure 2a

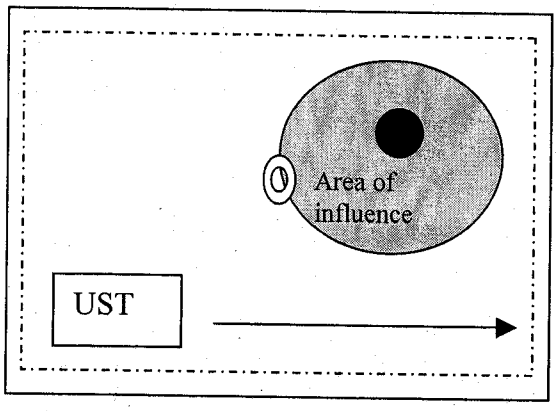

Figure 2b

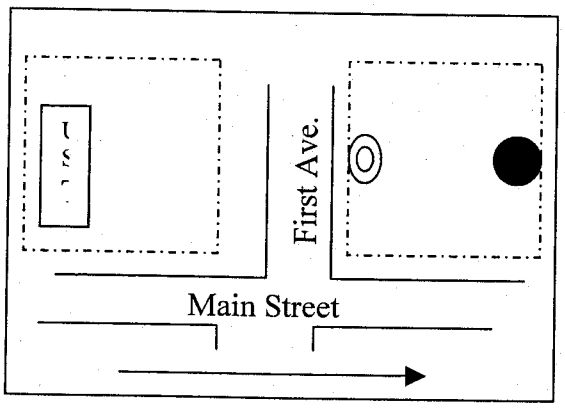

Figure 2c

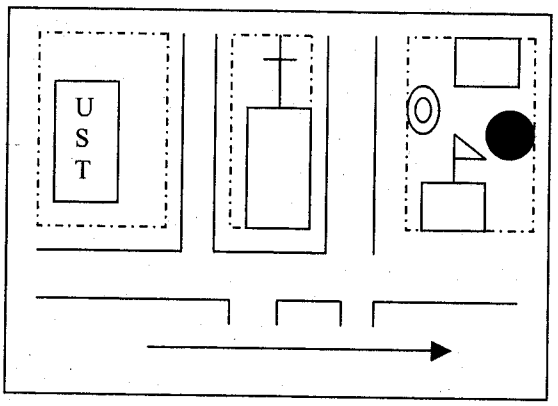

Figure 2d

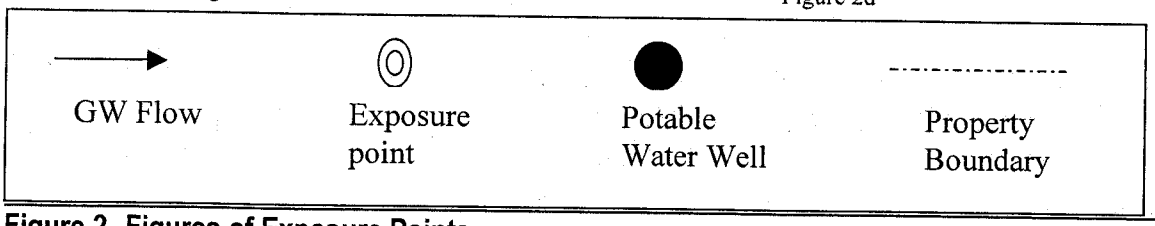

Figure 2 Figures of Exposure Points

3 - Establish the SSTL

Site-specific target levels should be established for each CoC and each particular pathway identified in the site conceptual model based on the spatial and temporal (both measured and predicted) attenuation of the concentration of each CoC above the RBSL. All possible scenarios must be evaluated during this process utilizing simple fate and transport models. Input data can be limited to site-specific data attainable through standard industry practices. All assumptions must be listed and fully explained.

The following steps should be followed to complete the Tier 2 evaluation:

- For the soil leaching to ground water pathway, the SSTL for soil can be calculated using the leachability model provided in Appendix C. Following the method described below, it may be appropriate to first calculate the SSTL for the ground water pathway before using the leachability model. The soil SSTL must be protective of the estimated SSTL for ground water.

- For the ground water ingestion pathway, there are two methods that can be used to estimate the reduction of CoC in the saturated zone: i) using empirical data and ii) models implemented with site-specific data.

- In a case where the CoC plume is shown to be stable or shrinking (by monitoring data), empirical data can be used to approximate the Concentration Reduction Factor (CRF) of the CoC in the relevant medium from the source to exposure point. For example, if the concentration of benzene in source area is 100 micrograms per liter (µg/L) and the actual measured non-zero concentration in the most down gradient monitoring well is 10 micrograms per liter (µg/L), and then benzene has been documented to be reduced by a factor of 10 (i.e., the CRF is 10). The SSTL = RBSL X CRF. Since the ground-water RBSL for benzene is 5 µg/L to be applied at the exposure point, the SSTL for ground water to be met at the source area is (5 µg/L * 10) =50 µg/L.

- Fate and transport models can also be used to calculate the SSTLs. SSTLs are typically calculated by calibrating the model using actual measured site-specific data and then, increasing or decreasing the concentration in the source area until the concentration at the receptor will not exceed the RBSL. For sites with site-specific conditions that may warrant a more complex analysis, it may be appropriate to utilize computer models such as Bioscreen, Solute, AT123D, Bioplume II, and other applicable models to calculate the SSTLs. All assumptions made must be valid and the input parameters, along with explanation for their choice, must be provided with the modeling results.

- For other chemicals:
    - In a Tier 2 evaluation, SSTLs for the dermal contact, soil and ground water ingestion and vapor inhalation pathways shall be based on a carcinogenic risk limit of 10^{-6} and a hazard index of 1 for non-carcinogens to be applied at the exposure point. Each chemical is evaluated separately for each exposure route, as SCRBCA does not consider the additive effect of risk from different chemicals and different routes of exposure. The state toxicologist will be consulted as necessary to provide recommended exposure limits.

TIER 2 ACTION

Once the Tier 2 evaluation is completed, three decision options are available for consideration based on the CoC concentrations:

1 - Monitored Natural Attenuation Action

If the representative concentrations (see STEP 3) of the CoCs are below the SSTLs, further CoC delineation is not necessary. A CAP proposing a short-term (e.g., 18 months or less) monitoring program to verify natural attenuation should be submitted. The Site Rehabilitation work scope describes the details of demonstrating natural attenuation.

2 - Active Corrective Action

If the concentration of the CoCs are above the SSTLs and Tier III assessment is not considered an appropriate option, Site Rehabilitation to achieve Tier 2 SSTLs should be recommended. Free-phase product must be removed to the extent practicable pursuant to R.61-92, Section 280.64.

If the concentrations of the CoCs are above the SSTLs, Tier 3 evaluation is warranted under the following conditions:

- If the SSTLs developed under Tier 3 evaluation are anticipated to be significantly different than the Tier 2 SSTLs (i.e., concentrations of CoC exceed the SSTLs but it is predicted that the use of site-specific biodegradation data will allow different site-specific cleanup goals to be determined);

- If the cost of remedial action to Tier 2 SSTL will likely be greater than Tier 3 evaluation (data collection, analysis, review, etc.) and subsequent remedial action; and

- The approach used to derive the Tier 2 goals is not appropriate for conditions at the site.

3 - TIER III ASSESSMENT

In a Tier III, SSTLs for the source area and the point(s) of compliance are developed on the basis of more sophisticated statistical and CoC fate and transport analyses using site-specific input parameters for appropriate exposure scenarios. Any additional information required for site-specific modeling efforts should be proposed in a Tier II Assessment Plan.

TIER 3 EVALUATION

The Tier 3 evaluation involves the use of more sophisticated mathematical models than those used in Tier 2 (e.g., computer analytical models) or numerical ground-water modeling codes that predict time dependent dissolved CoC transport under conditions of spatially varying permeability fields to predict exposure point(s) concentrations and to re-calculate SSTLs based on more site-specific data. Monte Carlo models, which allow a range of fate and transport scenarios to be calculated, may also be appropriate. Less conservative

site-specific exposure factors can be used in calculations for commercial and industrial sites if pre-approved by the Department. All assumptions, methods and models must be submitted for pre-approval.

TIER 3 ACTION

Once the Tier 3 evaluation is completed, two decision options are available for consideration based on the CoC concentrations:

1 - Monitored Natural Attenuation (MNA) Action

If the concentrations of the CoCs are below the SSTLs, further CoC delineation is not necessary. A CAP proposing a short-term monitoring program to verify natural attenuation should be submitted. The Site Rehabilitation work scope describes the details of demonstrating natural attenuation.

2 - Active Corrective Action

If the concentrations of the CoCs are above the SSTLs, an active cleanup to achieve Tier 3 SSTLs should be recommended.

SITE REHABILITATION (ACTIVE OR MNA)

The selected active Site Rehabilitation methodology must be designed to achieve SSTLs for each CoC. An appropriate monitoring program will be required to ensure that the target goals continue to be met and the receptor(s) are protected. Once the SSTL for every CoC is achieved, a verification-monitoring program to demonstrate natural attenuation should be implemented. Please refer to the Site Rehabilitation work scope for details. Departmental approvals and/or permits are required for all CAPs, air and water discharges, underground injection, etc. Detailed design specifications must be developed for installation and operation of above ground remediation systems. All planned Site Rehabilitations, whether active or MNA, will be placed on public notice as required by the SCUSTCR (R.61-92, 280.66) to allow potentially affected parties to participate in the Site Rehabilitation decision-making process.

VERIFICATION MONITORING FOR MONITORED NATURAL ATTENUATION

During or following a Site Rehabilitation, a compliance monitoring program may be required to ensure that the target goals continue to be met and the assumptions and predictions used in Tier 2 and 3 are verified. In order to reach these goals, appropriate monitoring parameters (organic and inorganic, as necessary), frequency of monitoring, and monitoring methods will be established based on site-specific requirements. Once monitoring data support the conclusion that the contaminant plume has reached equilibrium or is not moving at a significant rate; that concentrations of CoCs are not increasing; that no unacceptable to risk to human health, safety, or the environment exists; and that the CoCs will naturally attenuate over time, no further action under SCRBCA is necessary.

NO FURTHER ACTION DECISIONS

No further action (NFA) decisions will be issued by the Department for underground storage tank releases where additional site rehabilitation actions are not required. An NFA is issued where each CoC for soil, vapor or ground water has decreased to the RBSL. A Conditional No Further Action (CNFA) may be issued upon the Department's concurrence that the petroleum CoC concentrations are less than SSTLs but still greater than the RBSLs. Such decisions can be reached only when verification monitoring documents that natural attenuation is taking place, and that no risk to human health or environment will result. For example, if concentrations of CoCs are present but below SSTLs in the ground water in areas where human consumption is prevented by local ordinances, then no further actions are necessary and a CNFA may be issued. Again, this decision is based on the demonstration that the release does not pose a risk to human health or the environment. The Department's CNFA decision will be issued in writing to the owner/operator and all assumptions and conditions will be outlined (e.g., the ground water should not be used for consumption). A registry of releases will be maintained in the SCDHEC Freedom of Information office and the Bureau of Land and Waste Management Website to assist the public and document the status of release(s). This registry will identify the location of the UST release, the affected property (or properties), and the assumptions and conditions of the CNFA. If the Owner/Operator provides information to support that the concentrations associated with the release are at levels below risk-based screening levels for all the CoCs of concern at a facility where a CNFA has been issued, then the release will be given a NFA.

Scope of Work for the Initial Groundwater Assessment, Tier I Assessment, and Tier II Assessment

Work to be done for the Initial Groundwater Assessment (IGWA) Assessment:

1. Location of all private and public water supply wells (drinking and non-drinking) and other potential receptors (as defined in the Risk Based Corrective Action (RBCA) Procedures Section) within a 1000 foot radius of the site.
    a. Document the locations in the Report of Findings and depict the locations on the relevant portion of the appropriate US Geological Survey 7.5 min topographic map. The map should be included as Figure 1 in the submitted report. Map scale should be 1 inch = 300 feet.
    b. Immediately upon locating any receptors screen them for hydrocarbons using a properly calibrated screening device. (See Section B1)
    c. Obtain water samples for all water supply wells and surface water bodies within a 250-foot radius of the site. All municipal supply wells within a 1000 foot radius shall also have a sample collected and analyzed for the appropriate parameters (See Section B1)
    d. Notify the UST project manager at (803) 896-6241 as soon as possible if any water samples are collected within a 1000-foot radius so that the approved SUPERB agreement can be amended.
    e. If field screening indicates the presence of hydrocarbons notify the UST project manager at (803)-896-6241 within 48 hours of detection and provide the name, address and a contact telephone number for all affected property owners. All field-screening and laboratory data for these receptors shall be included in the Report of Findings.
2. Document the current use of the site and adjacent land as residential, commercial, agricultural, industrial, etc. Identify any UST site(s) within a 500-foot radius of the subject site and provide their UST permit number(s) in the Report of Findings.
3. Monitoring Well or Boring Installation (See Section B1)

4. Soil and Groundwater Sampling and Analysis (See Section B1)
5. Water and Soil Disposal – All solid, development water, and any purge water generated during assessment implementation shall be temporarily stored in 55-gallon drums or a similar container. Upon receipt of laboratory analytical results, the soil and/or water shall be properly disposed of in the appropriate manner. The Contractor's Addendum shall state specifics.

Work to be done for Tier I Assessment:

The Tier I Assessment shall be conducted at sites where a release of petroleum from a regulated UST has been confirmed and additional information is necessary to further categorize the release (See Appendix A for flow chart).

1. Location of all private and public water supply wells (drinking and non-drinking) and other potential receptors (as defined in the Risk Based Corrective Action (RBCA) Procedures Section) within a 1000 foot radius of the site.
    a. Document the locations in the Tier I Assessment Report and depict the locations on the relevant portion of the appropriate US Geological Survey 7.5 min topographic map. (Include as Figure 1 in submitted report)
    b. Screening receptors (see Section B1)
    c. Water Samples (see Section B1)
2. Document the current use of the site and adjacent land as residential, commercial, agricultural, industrial, etc.
    a. Include a summary of all zoning regulations concerning the installation of drinking and/or irrigation wells or land use. If no zoning regulations exist, the nearest property boundaries within 1000 feet of the UST shall be identified.
        i. Include names and phone numbers of any persons that have provided information pertaining to land use or zoning ordinances, statutes, and/or regulations as Appendix H of the Tier I Report (See Section A9)
    b. Obtain a copy of the applicable portion of a tax map which depicts the location of the facility, the release area, and all properties located adjacent to the impacted areas including active and former gas stations with permit numbers (if available). The tax map and names and addresses of owners of each of the properties must be provided as Appendix C of the Tier I Report. (See Section A9) Additionally, the names, address, and daytime phone number will be provided for all owners of private wells. The private wells will be shown in the correct location of the tax map.
    c. Locate and report all underground utilities (gas electrical, telephone, water, Cable TV, storm drain and sewer lines) within a 250-foot radius of the UST facilities boundaries. These locations must be pinpointed to the nearest 1 foot horizontally and the depth to the nearest 2 feet. Depict all of these identified utilities on a surveyed map.
    d. Soil Boring and Monitoring Well Installation (See B1)
    e. Soil and Groundwater Sampling and Analysis (See B1)
    f. It is required that after completion of the Soil Boring/Monitoring Well installation that a survey of the UST facility shall be produced by a SC Licensed Professional Land Surveyor. This should be included as Appendix A (See Section A9) in the submitted report. This survey shall include all of the following:

i. The location of all manmade structures,
ii. All above ground and underground utilities,
iii. All potential receptors on the site,
iv. All existing and/or former USTs and associated piping and dispensers, and
v. All monitoring wells within the survey area.

3. Tier 1 Assessment: The Tier I Assessment evaluates the actual and/or potential impact to receptors. Based on the data gathered from the fieldwork, a Tier 1 Risk Evaluation shall be completed. More detailed information may be found in the Risk Based Corrective Action (RBCA) Procedures Section.

   a. Compare the data with Risk Based Screening Levels (RBSL) - For a Tier 1 Risk Evaluation it is assumed that all exposure points are located in the source area. CoC concentrations shall be compared with the values provided in the Appendix C of this document, as appropriate. The following measurements of representative concentrations of CoC are to be utilized in this comparison:
      i. Air - The maximum CoC vapor concentration obtained during the last sampling event shall be used. Historical sampling events can be used to establish trends.
      ii. Groundwater - The maximum CoC concentration obtained during the last sampling event shall be used. Historical sampling events can be used to establish trends.
      iii. Soil - The maximum CoC concentration obtained during the last sampling event shall be used for the ingestion and dermal contact pathways. For the soil leaching to groundwater pathway, the average of the two soil sample results with the highest concentrations from each source area shall be used.
   b. Site Conceptual Exposure Model - The site conceptual model shall identify all complete exposure pathways. Information required to develop this model includes:
      i. Release information - Pertinent release information may include, but is not limited to, the historical use of the property where the release occurred, the approximate age of the release, and the properties of the CoC (e.g., solubility, volatility) that were released.
      ii. Characteristics of the site - Pertinent site characteristics may include, but are not limited to, the soil type, depth to groundwater, hydraulic gradient, groundwater flow direction, seepage velocity, and the physical distribution of CoC around the source.
      iii. Proximity of potential receptors and their construction - The construction specifications (e.g., depth, diameter, and material of construction of a storm sewer) of all potential receptors shall be identified.
      iv. Current land use of all affected properties - For each property that is impacted, may potentially become impacted, or is adjacent to a potentially impacted property, the current land use shall be identified (e.g., vacant lot, restaurant, school, residence, factory), and tax map submitted as part of the report.
      v. Applicable zoning or land use ordinances - The local city or county administrative authorities shall be contacted for information pertaining to any applicable zoning and land use ordinances. Zoning ordinances set broad-scale restrictions on property development such as residential, commercial, or industrial. Land use ordinances may establish smaller scale restrictions such as disallowing the

installation of drinking water or irrigation wells. A photocopy of the applicable sections or summary of the ordinances shall be provided. If a copy cannot be obtained, name, phone number, and business address of the appropriate authorities shall be provided with the relevant information.

c. Based on the estimated age of the release, known distribution of the CoC, and the potential for migration, all complete and potential exposure pathways shall be identified and summarized for land use (current and future conditions). The following potential exposure pathways shall be considered for evaluation:

Item	Potential Exposure Pathways
1. Air	- Inhalation of ambient vapors (particulate or volatile) - Explosive hazard
2. Surface Water	- Ingestion - Dermal contact - Volatile inhalation (enclosed space and outdoor)
3. Groundwater	- Ingestion - Dermal contact - Volatile inhalation (enclosed space and outdoor)
4. Surficial Soil	- Ingestion - Dermal contact - Volatile inhalation (particulate or volatile)
5. Subsurface Soil	- Ingestion (during excavation) - Dermal contact (during excavation) - Volatile inhalation (particulate or volatile) - Leaching to groundwater

Table 5 Potential Exposure Pathways

d. Identify Data Requirements - Identify the data necessary to characterize the migration potential, and to quantify the potential impact, for each complete, or potentially complete, exposure pathway identified in the site conceptual model above. Enter all identified data requirements in the Site Conceptual Model Tables (Appendix D) to be included in the Tier I Report (See Section A9).

e. Recommendations for Further Action - Utilizing the information above, a recommendation for the next appropriate action shall be made by the contractor submitting the report.

Work to be done for Tier II Assessment

The Tier II Assessment methodology is used for sites with petroleum releases from regulated underground storage tanks (USTs) where additional investigation of site-specific conditions is warranted based on existing data from previous investigations. Since previous investigations having indicated that the contamination has gone off site from the Leaking UST, Tier II Assessment attempts to discover the extent of the contamination horizontally and vertically. Thus, the number of wells and borings and placement of

these are not specified in this QAPP. Rather the logic to determining where to site the borings/wells will be discussed.

Tier II Assessment Report Requirements and Responsibilities - All site rehabilitation activities related to a release from a regulated UST system require technical approval by the Department in accordance with applicable state directives. All site rehabilitation activities must be conducted by a SC Department of Health and Environmental Control (SCDHEC) Class I certified site rehabilitation contractor (the contractor) as required by the State Underground Petroleum Environmental Response Bank (SUPERB) Site Rehabilitation and Fund Access Regulations, R.61-98, whether reimbursement will be from the SUPERB Account or other financial mechanism. A qualified professional from the company or firm must sign and seal the Tier II Assessment Report and their South Carolina PE or PG certification number and SCDHEC certified Class I site rehabilitation contractor number must be on the signature page of the report. All temporary and other monitoring wells must be drilled under the direction of a licensed class A, B, or C South Carolina Certified well driller. All laboratory analysis must be performed by a South Carolina certified laboratory for the specified parameters. All investigative derived waste must be handled within 90 days of generation in accordance with applicable state and federal regulations.

For offsite access, the contractor and/or UST owner/operator must obtain all off-site access agreements and/or encroachment permits necessary for investigation and well installation. The UST Management Division will assist in acquiring access if all efforts to gain access fail, and the tank owner/operator requests assistance from the UST Management Division in writing. When off-site access assistance is requested, the following items must be provided to the project manager:

1. The property identification to include the tax map number of the property, (e.g., 00020-304-10-01A), and 911 street address, (e.g., 201 South Main).
2. The property owner's complete name, address, and telephone number.
3. A map with the exact location for all proposed temporary screening points or monitoring well locations for each parcel or property. To ensure the exact parcel is identified, the map should clearly show include the distance from properly identified state or county road intersections.
4. Copies of all previous correspondence to the property owner(s), any reply received from the property owner(s).

This section describes the minimum elements necessary for a Tier II assessment while allowing technical flexibility so that the work may be completed in an effective manner. The purpose of the Tier II assessment is to define the extent of all petroleum CoC (to include RCRA metals for waste oil UST (s) as well as identify all current and potential receptors that could be impacted by the release from a regulated UST system. The results of the Tier II Assessment are to be used to establish appropriate site-specific target levels and recommendations for future actions as outlined in the Risk Based Corrective Action (RBCA) Procedures Section.

1. Tier II Assessment Plan: A concise Tier II assessment plan shall be submitted to the UST Management Division by the tank owner/operator or on their behalf by their site rehabilitation contractor for approval prior to implementation. To assist with preparation of the Tier II Plan, the Freedom of Information Office may be contacted at (803)-898-3882 in order to obtain the technical file of the release being investigated if previous site data is not available from the tank

owner/operator or if information concerning adjacent UST or AST facilities is required. The Tier II plan included as part of the contractors addendum shall include as a minimum:

A. **Site information** – A summary of all general information including Facility Name, Address, Phone Number, and UST Permit number; the name address, phone number of the UST owner/operator responsible for investigating the release(s); the property owner; the site rehabilitation contractor; and the well driller. If the tank owner/operator responsible for site rehabilitation is different from the current tank owner, include the name, address, and phone number for the current tank owner.

B. **Maps** - This section must include a copy of the relevant portion of a 7.5-minute United States Geological Survey (USGS) topographic map showing the site location, and a scaled site map. The site map shall conform to industry standards and must include as a minimum: a north arrow, a legend, a bar scale, and the date of data collection. Identify the site by the facility name, complete street address, and UST permit number. The map should indicate the location and identity of all on-site and adjacent structures, existing and/or former UST(s), AST(s) and associated underground piping; identify all streets and/or highways; locate property lines, paved areas, and existing monitoring and other wells (e.g. vapor monitoring wells). All private wells (potable, municipal, irrigation) will be accurately located on the topographic and/or site map.

C. **Field Screening Methodology** - The specific field screening methodology shall be discussed and the proposed number and depth of screening points shall be indicated. As Methyl tert-Butyl Ether (MtBE), 1,2-dichloroethane (1,2 DCA), and ethylene dibromide (EDB) are not typically detected above RBSL values using vapor screening instruments, the site rehabilitation contractor should send groundwater samples from selected screening points to a laboratory to ensure the horizontal and vertical extent of petroleum Chemicals of Concern (CoC) are defined prior to installation of monitoring wells. The use of field screening methods to optimize the number and location of permanent monitoring wells is required. Laboratory analysis should not be requested for all screening points.

D. **Monitoring Wells** - The maximum number and depth of monitoring wells, to include soil borings and temporary wells used for screening, estimated to be necessary to define the concentrations and extent of free-phase product and groundwater CoC shall be included in the plan. If the contractor later determines this number to be insufficient, additional monitoring wells or additional footage must be requested of the UST project manager. The well screen length should be a minimum of ten feet for shallow wells and five feet for deep wells. The well screen for shallow wells should be installed so that the water table is bracketed. However, if the contractor is aware of significant groundwater level fluctuations, a longer screen length may be necessary and shall be specified in the plan. A shallow well will typically be installed adjacent to a surface water body that might be impacted. A shallow and deep monitoring well will typically be installed between the release source and all supply wells that could be impacted as a future compliance point for that receptor. Additional wells require the Department's technical approval as well as financial pre-approval if costs are to be reimbursed from the SUPERB Account or will be applied toward

a SUPERB deductible. To provide a record of the request by the contractor and approval by the Department, it is recommended that any additions be requested by e-mail to the appropriate UST Project manager.

E. **Implementation Schedule –** The contractor proposes a schedule indicating the time frame required for submittal of the Tier II report after notification to proceed from the UST Management Division. The due date of the report shall be 90 to 100 days from the date of Tier II plan approval unless otherwise designated by the Department. If the work cannot be completed as specified, the UST Project Manager must be notified immediately. A change in the report due date may be issued for work to continue if adequate justification is provided. To provide a record of the request by the contractor and approval by the Department, it is recommended that the appropriate UST Project manager be notified by e-mail.

In some cases, the Department may predetermine a defined scope of work to meet a specific goal(s) (e.g., installation of a compliance well, resample the existing monitoring well network, free product recovery wells, free product recovery test) and plan preparation by the contractor will not be necessary. In these instances, the UST Management Division will notify the tank Owner/Operator and his designated site rehabilitation contractor to proceed with the required work and a due date will be assigned.

Tier II Implementation

1 - Objectives - The objectives and performance standards of the Tier II Implementation are:

A. To delineate the horizontal and vertical extent of CoC in the soil and groundwater,

B. To identify and evaluate all exposure pathways based on a current survey of existing and potential receptors,

C. To characterize the nature of the CoC present,

D. To define the site geology and hydrogeology, and

E. To use fate and transport analysis to predict the actual or potential impact of CoC on receptors if requested by the Department. The Department shall allow some flexibility in meeting this objective, provided that the contractor meets the first four performance standards.

2 - Receptor - Utilities Survey / Site Survey- To successfully complete the receptor and utility surveys the contractor shall:

A. Locate all private and public water supply wells (potable and non-potable) and other potential receptors as defined in the RBCA document (i.e., utilities, surface waters, wetlands, basements) within a 1,000-foot radius of the site or the edge of the plume whichever is farther from the release source. Document the receptor locations in the Assessment Report

and depict the locations on the relevant portion of the appropriate United States Geological Survey 7.5 minute topographic map and on the site base map. Provide a table listing the property owner's name, address, and telephone number for each privately owned receptor.

B. Record the current use (residential, commercial, agricultural, industrial) of the site and adjacent land including all properties having a monitoring well associated with this facility. All adjacent properties with tanks (underground, above ground, or heating oil) that are active or closed will be identified. If the tanks are permitted, the applicable permit number(s) will be provided. Information pertaining to any applicable zoning and land use ordinances shall be obtained from local city or county administrative authorities. Zoning ordinances set broad-scale restrictions on property development such as residential, commercial, or industrial. Land use ordinances may establish smaller scale restrictions such as disallowing the installation of a drinking water or irrigation well. A copy of the applicable sections or a summary of the ordinances shall be provided. Additionally, the name, phone number, and business address of the appropriate local authorities shall be provided with a summary of the relevant information. A photocopy of local regulations or ordinances is not required.

C. If not previously submitted, provide a copy of the applicable portion of the county tax map. This map shall depict the location of the facility, all impacted properties, all properties located adjacent to the impacted properties, and any property on which a monitoring well (to include temporary wells) was installed as part of the investigation. Provide a table listing the names and addresses of the owners of each of these properties and the name of all well(s) on that property or parcel.

D. Locate and report all underground utilities (electrical, natural gas, telephone, water, cable TV, storm drain, and sewer lines) within a 500-foot radius of the site, or 500 feet from the edge of the plume whichever is greater, on a one inch equals 50 foot map unless another scale is approved by the UST Management Division Manager. Depict all identified underground utilities, both on and adjacent to the property, on a scaled site map to the nearest one-foot. The depth (within 2 feet) also shall be reported.

E. If receptors are identified that may be impacted, immediately screen for hydrocarbons using a properly calibrated screening device. Water samples shall be obtained for all drinking water supply wells and surface water bodies within a 1,000-foot radius of the site or within 500 feet of the down gradient edge of the plume. The location of these wells will be included on the site map, and well ownership information will be included in an appendix of the report. If field screening or laboratory analysis indicates the presence of CoC, notify the UST Project Manager within 48 hours of detection at (803) 896-6241 and provide the name, address, and a contact telephone number for all affected property owner(s). All field-screening and laboratory data for sampling of receptors shall be included in the report of findings.

F. The contractor must provide a comprehensive facility survey if not already completed. A South Carolina Licensed Land Surveyor must perform the survey. The scale of the surveyed map should be one inch equals 50 feet unless the UST Project manager previously approved another map scale. The surveyor's certification number, business address, telephone

number, and date of survey must be on any applicable maps. The 500-ft by 500-ft foot survey shall include, at a minimum:

1) The locations and relative elevations of potential receptors

2) Existing or former USTs

3) UST lines

4) UST dispensers

5) Field screening points

6) Soil borings

7) Wells (monitoring, vapor wells), and

8) Other above and below ground structures

G. Only one comprehensive survey will be required per Tier II Assessment for surveyed areas up to 250,000 square feet (approximately 500 x 500 feet). If the area was previously surveyed, only a subsequent survey to locate new soil borings, or monitoring wells on the original survey plat will be required.

3 - Soil Boring Installation, Sampling, Analysis, and Abandonment - See Section B1

Site Rehabilitation

Based on the concentration of each CoC and its potential risk to receptors, two processes of Site Rehabilitation are possible: A) active Site Rehabilitation and B) intrinsic remediation or natural attenuation.

1 - Active Site Rehabilitation – This term is synonymous with active remediation and refers to physical actions taken to reduce the concentrations of CoC. Active Site Rehabilitation is applicable where:

A. The concentration of any CoC exceeds the SSTL and must be reduced to prevent an impact to an actual or potential receptor;
B. Free phase product is present with a thickness greater than 0.01 feet or 1/8 inch; or
C. The plume continues to increase in size, CoC continue to migrate away from the source, or the concentration of any individual CoC is increasing.

2 - Intrinsic Remediation or Natural Attenuation - These terms refer to the naturally occurring microbial and fate and transport processes that results in a reduction of the total mass of hydrocarbons. Intrinsic remediation is applicable where:

A. The concentration of any CoC exceeds the RBSL but is less than the SSTL;
B. Measurable free product is not present;
C. The CoC plume is at or approaching equilibrium (i.e., the advancement of the plume is slowing down), and the concentration of a CoC is not increasing at any point;

D. The predicted impact on actual or potential receptors does not exceed the RBSL at any time (i.e., no predicted risk to human health or the environment); and
E. All conditions for intrinsic remediation can be verified in 18 months or less.
F. An intrinsic approach may need to be upgraded to active Site Rehabilitation if the above conditions cannot be demonstrated, a new or potential receptor is identified, or if there is a change in land use or zoning ordinances.

Other UST Work to be implemented

1 - AFVR Events
   A. Aggressive Fluid Vapor Recovery events may be utilized to remove free-phase product from the subsurface.

2 - Public/Private Well Sampling
   A. UST Management Division staff may collect samples from public or private water supply wells in response to a complaint, as part of a receptor survey at a particular site, or as a confirmation sampling to determine current concentrations.

3 - Monitoring Well Sampling
   A. UST Management Division staff may collect samples from monitoring wells to establish or verify current site conditions.
   B. The UST Management Division may direct the responsible party and the certified contractor to conduct a sampling event or may direct the contract certified contractor to conduct a sampling event.

4 - Monitoring Well Installation
   A. The UST Management Division may direct the responsible party and their certified contractor to install monitoring wells or may direct the contract certified contractor to install monitoring wells

5 - Installation of Granulated Activated Carbon (GAC) Units
   A. The UST Management Division may direct the responsible party and their certified contractor to install or may direct the contract certified contractor to install granulated activated carbon units of private supply wells to filter out chemicals of concern until a permanent source of non-impacted drinking water can be obtained.

6 - Abandonment of Monitoring Wells
   A. The UST Management Division may direct the responsible party and their certified contractor to abandon or may direct the contract certified contractor to abandon monitoring wells that are no longer needed or damaged.

The specifics of the above-mentioned work will be detailed in B1

A7 Data Quality Objectives and Data Quality Indicators

Data are evaluated primarily from a standpoint of consistency with the situation, using the expertise and experience gained from past investigations. The Project Manager should evaluate all data for accuracy, validity and defensibility within the context of the overall investigation. For example, data used for field screening to determine the general location of the contaminant plume need not be of the same quality as data used to determine the level of impact to a drinking water source. Hydrogeology, surface topography, the physical location of the site, and the presence of possible receptors are taken into account when evaluating data. The site-specific QAPP Addendum will include a map in Section A7 showing property boundaries and the location of the USTs and possible receptors (both on the property and off). Where appropriate, data verification is employed. Repeat measurements, check samples and "split" samples are all measures that are employed in addition to routine review of laboratory QA/QC to ensure that the data being evaluated is accurate.

The evaluation of data with respect to a site is always performed relative to the history or the future of the particular release, whether preliminary (part of a site assessment or subsurface investigation) or the evaluation of Site Rehabilitation system effectiveness. Data are evaluated, along with previous data, to ascertain the present condition of a site and to project future actions necessary to mitigate the health and environmental impacts of the release. The most important factor in the evaluation of most data (such as groundwater levels and analytical results) is the fact that they are generally a "snapshot in time" for a release. It is important not to attach excessive significance to such data, which may only reflect a short-term fluctuation. Groundwater is a slow-moving medium, and long term monitoring is generally required before definite fate and transport characteristics of a release can be defined. However, employing professional judgment in the evaluation of preliminary data can reduce the investigation period substantially.

The quality of all environmental data generated and processed will be assessed for accuracy, precision, completeness, representativeness and comparability (see Section C1). The data user should ensure that the quality of the data to be used meets the minimum requirements expressed in the study design.

DQO Process:

1. **State the Problem:** The program is to evaluate the plume of a UST release, and determine the action needed according to regulation.

2. **Identify the Decision:** If the contamination exceeds regulatory action levels then the action is determined by regulation.

3. **Identify inputs to the Decision:** Inputs to the decision include the concentrations within the plume.

4. **Define the Study Boundaries:** The boundaries are laid out in each QAPP addendum (to be developed by the individual contractors).

5. **Develop an analytical approach and a Decision Rule:** If the contamination is above the RBSLs then the appropriate action is designated in the decision-making flow chart (Appendix A) is done.

6. **Specify Limits on Decision Error:** Error is inherent in every sampling or analysis procedure. Error is limited by using SCDHEC certified Laboratories. The SC DHEC Office of Environmental Laboratory Certification certifies not only for drinking water parameters, but also for SW846 methodology and CWA methodology. As part of the certification process the Lab's SOPs have been examined by the SCDHEC Office of Environmental Laboratory Certification. Precision, sensitivity, and accuracy, as laid out in those SOPs, are acceptable. The samples are also comparable because the allowed methodology is specified in Appendix E. Representativeness is less important in following a plume of contamination, however, the sampling protocol is stringent enough to ensure that the plume is well defined. Completeness is important to the entire process and contractors are expected to produce a report with at least 90% valid samples/data.

7. **Optimize the design for obtaining the data:** IGWA, Tier I and Tier II sampling protocols are based on experience with characterizing the leaking UST's plume and impact on receptor wells. Thus these protocols have optimized the design for obtaining the data, making a decision based on accurate information and obtaining outcomes that will protect the human and environmental health through specifying the location of the sampling sites and the number of samples to be collected.

DQIs:

Precision:

Precision examines the distribution of the reported values about their mean. The distribution of reported values refers to how different the individual reported values are from the average reported value. Precision may be affected by the natural variation of the matrix or contamination within the matrix, as well as by errors made in the field and/or laboratory handling procedures. Duplicate field and matrix spike/matrix spike duplicate will provide an indication of precision. Precision will be evaluated by the calculation of the Relative Percent Difference (RPD):

$$RPD\ (\%) = \text{Absolute value of } ((C_S - C_D)/(C_S + C_D)/2) \times 100$$

Where: C_S = Concentration of the sample
C_D = Concentration of the duplicate sample

The RPDs will be compared to the limits presented in tables in Appendix E.

Bias:

Bias measures the accuracy of a measurement system. Sources of error introduced into the measurement system may be accounted for by using trip blanks and matrix spikes. Error sources are the sampling process, field contamination, preservation, handling, sample matrix, sample preparation, and analytical techniques. Accuracy will be evaluated by calculating the percent recoveries (%R) of the matrix spike/matrix spike duplicate samples, the laboratory control samples, and the Volatile Organic Contaminate (VOC) surrogates. The %R for the matrix spike samples will be calculated using the following equation:

$$\text{Percent Recovery} = ((C_M - C_S)/T) \times 100$$

Where: C_M = Concentration of matrix spike sample
C_S = Concentration of sample
T = amount spiked

The %R for the laboratory control samples and the surrogates will be calculated using the following equation:

$$\%R = (C/T) \times 100$$

Where: C = observed concentration
T = amount spiked

The percent recoveries will be compared to the limits presented in Appendix E.

Representativeness: Representativeness expresses the degree to which sample data accurately and precisely represents a characteristic of a population, a parameter variation at a sampling point, or an environmental condition. This criterion will be met by assuring that sampling locations are properly selected, that a sufficient number of samples are collected, and that all sampling and handling procedures are conducted in accordance with the protocols outlined in this QAPP.

Completeness: This project is designed based on principles to define the plume of contamination. The number of samples collected and data generated will be reviewed during the project. If some samples become invalid due to collection, shipping, or laboratory problems, the samples may be recollected to ensure that enough data is available to make a sound decision. The number of samples required to define a plume of contamination are dependent on the size of the plume and therefore must be determined in the field during the assessment process. The Project Manager will provide oversight to ensure that the site has been adequately assessed.

Comparability: Comparability is a qualitative parameter expressing the confidence with which one data set can be compared with another. Sample data should be comparable with other measurement data for similar samples and sample conditions. This goal is achieved through using standard techniques to collect and analyze representative samples and reporting analytical results in appropriate units.

Method Sensitivity: Method sensitivity is parameter dependent and is defined in Appendix E.

A8 Training and Certification

All SCDHEC UST Management Division staff involved in the assessment and remediation process working on UST projects must have the following training:

- 40-hour OSHA HAZWOPER

- OSHA HAZWOPER Annual Refresher

Most personnel with QA responsibilities within the UST Management Division have acquired their QA experience through on-the-job training. Those designated to serve in the program have a technical (scientific, engineering) background that includes previous experience with QA concepts and with evaluation of data generated from environmental measurements. Management within the UST Management Division encourages and supports the acquisition by personnel of quality assurance experience or pertinent experience and information. This is done through:

- participation in QA-related EPA seminars;
- attendance at appropriate professional meetings, conferences or workshops;
- enrollment in appropriate short courses.

It shall be the policy of the Department to provide resources to allow for personnel involved in leaking UST investigations to receive training relating to groundwater contamination, Site Rehabilitation technologies, and health and safety issues. Records of all the training classes taken by the UST Management Division staff are kept in each staff member's personnel file.

UST Management Division staff will undergo all necessary training to ensure compliance with the EQC SOP Manual regarding field procedures (acceptable sampling techniques, sample collection, preservation and handling procedures, and field instrument operation and documentation procedures).

Contractor requirements:

A Class I certified contractor must have at least one person registered as a Professional Engineer or Geologist in South Carolina and have at least three years applicable experience in performing site rehabilitation activities related to releases of regulated substances from underground storage tanks. The certification number must be provided on all reports submitted to the UST Management Division.

A Class II certified contractor must have a minimum of three years applicable experience in performing site rehabilitation activities related to releases of regulated substances from underground storage tanks; and any necessary South Carolina certification and/or license. The certification number must be provided on all reports submitted to the UST Management Division.

All site rehabilitation activities at LUST sites must be conducted by a SC DHEC certified site rehabilitation contractor as required by SUPERB.

The contractor must ensure that personnel working on UST projects receive the necessary training to collect samples at UST sites, which is to include a minimum of 40-hour OSHA HAZWOPER and OSHA annual refresher and training in sampling protocols and procedures.

Well drillers must be certified in accordance with Title 40, Chapter 23 of the SC Code of Laws. The certification number must be provided on all well forms submitted to the UST Management Division. The certification number must also be provided in the site-specific QAPP addendum.

Laboratories must be certified in accordance with SCDHEC Office of Laboratory Certification for the analytical methods performed. The laboratory certification number must be provided on all laboratory data submitted to the UST Management Division. The certification number must also be provided in the site-specific QAPP addendum.

All of the above information will be obtained from the contractor as part of their addendum to the QAPP. In addition the contractor must specify who will be responsible for detailing how training will be provided, who will be responsible for assuring that personnel participating in the study receive proper training, and where the training is documented.

A9 Documents and Records

The UST Management Division QAPP will be reviewed and, if necessary, revised at least annually by the UST Management Division QAPP Manager. Any required updates to the QAPP will be distributed in accordance with the distribution list contained in this document. A copy of the QAPP will be maintained in a common directory on the UST Management Division file server. The UST project managers will be required to sign a statement indicating that they have received a copy of the QAPP. A new form must be signed whenever revisions to the QAPP are made to ensure that all project managers have been provided the most recent version of the QAPP. UST Certified Contractors will be provided a copy of the QAPP electronically. The contractor will be required to sign a statement indicating receipt of the QAPP. The statement will be required as part of the yearly certification renewal process. A new form will be required to be submitted when revisions to the QAPP are made. The contractor's addendum will include a signature page signed by all parties involved in the project that they have received the most recent version of the Program QAPP and the site-specific QAPP.

All records and reports submitted to the UST Management Division that contain interpretation of the data provided must be signed and sealed by a Professional Engineer or a Professional Geologist registered in the State of South Carolina. All original records and reports submitted to the UST Management Division must be maintained by the contractor for a minimum of 5 years, otherwise specified by the UST Management Division. Record archival policies for SC DHEC UST are given in Appendix J. This includes electronic as well as hard copy storage.

Each report submitted to the department shall include, at a minimum, the following elements as applicable to the scope of work being conducted:

A. Introduction:
   1. UST Facility Name, Permit #, Address, Phone Number, UST Owner's and Operator's name, address, and phone number
   2. Name, address, and telephone number of the property owner
   3. DHEC Certified UST Site Rehabilitation Contractor's Name, Address, telephone number, and certification number
   4. Name, address, telephone number, and certification number of the well driller that installed borings/monitoring wells.
   5. Name, address, telephone number, and certification number of the certified laboratory performing analytical analyses.

6. Facility history including tank information (number, size, and contents of all current and former USTs), date release reported to DHEC, estimated quantity of release, cause of release (if known), and status of any other releases at the facility. If the facility is no longer a petroleum marketing facility, please provide the current facility name and use. If the facility is currently not in use, please list the current use as vacant.
7. Regional geology and hydrogeology.

B. Receptor Survey & Site Data
1. Receptor survey results- Locate all private and public water supply wells (drinking and non-drinking) and other potential receptors (as defined in the South Carolina Risk Based Corrective Action (RBCA) Guidance Document, i.e., utilities, surface waters, wetlands, basements) within a 1,000-foot radius of the site. - the results shall include all known groundwater quality and public and private groundwater usage
2. Document the current use of the site and adjacent land (residential, commercial, agricultural, industrial, etc.). Identify any UST site(s) within a 1000-foot radius of the subject site and provide their UST permit number(s) in the report.
3. Site-specific geology and hydrogeology

C. Soil Assessment/Field Screening Information & Methodology
1. Describe the primary soil type and field screening results.
2. Describe how the soil sample was collected (e.g. two encore samplers and one four ounce jar) and preserved.
3. Describe how the field screening was conducted.

D. Monitoring Well Information
1. Provide the monitoring well installation and development date(s).
2. Describe the well development procedure.
3. Provide justification for monitoring well locations.

E. Groundwater Data
1. Describe the groundwater sampling methodology and provide the date sampled. Include groundwater measurements (temperature, pH, dissolved oxygen, specific conductance.)
2. Describe the purging methodology and provide the volume of water purged and groundwater measurements to verify that purging is complete.
3. If free product is present, provide the thickness.

F. AFVR Information
1. A brief description of the completed work scope and any relevant descriptions pertaining to the data tables.
2. A table summarizing the airflow (in CPM) and volatile concentrations collected from the stack of the truck every thirty minutes through the duration of the event. The table shall also document which well(s) were being recovered from during that time interval.
3. A table summarizing the magnehelic gauge measurements from all applicable wells on a thirty-minute time interval.
4. The total volume of water recovered (gallons).

5. The total volume of free phase product recovered (typically measured with a product/water interface device inserted into the top of the tanker at the completion of the event and then converted to an approximate volume).
6. The total mass of petroleum removed as vapor. This is calculated based on the airflow rate and the concentration of vapor.
7. A table documenting the free product thickness in each well before and after the recovery event.
8. Scaled base map depicting the location of the extraction wells and the surrounding wells equipped with magnehelic gauges.
9. Recovered free phase petroleum and groundwater must be accepted by a permitted treatment facility. There can be no spillage or leakage in transport. A copy of the disposal manifest from the receiving facility that clearly designates the quantity received must be included as Appendix G in the final report.

G. Granulated Activated Carbon Installation

1. Description of the unit installed, to include carbon capacity, warranty information, counter information, validation by Water Quality Association, where installed, combination or key information, etc.
2. A schematic diagram of the unit (new or old) with the model number, serial number, site name, UST permit number, inlet and outlet ports will be required. This information must be submitted within one week of installation.
3. The contractor must provide all calculations for determining COC breakthrough and the frequency at which the filter material must be changed.
4. All work under this contract must be done by a professional plumber certified in the State of South Carolina. Proof of certification must be provided with the QAPP Addendum

H. Results & Discussion

1. Assessment results – the report shall include a brief discussion of the assessment and results. The discussion shall include all methodology used.
2. Aquifer evaluation results (if conducted) – the report shall include a brief discussion of the aquifer evaluation and results.
3. Fate & transport results (if conducted) – the report shall include a brief description of the fate & transport model(s) used. All assumptions shall be clearly identified. The input parameters are to be given in tabular format. The method of model calibration for each CoC shall be discussed.
4. Tier 1 Risk Evaluation
   i. Site Conceptual Model Tables must be included. (See Appendix D)
5. Tier 2 Risk Evaluation (If requested by the UST Project Manager)
   i. Exposure pathway analysis. It is recommended that the site rehabilitation contractor fax all screening data, receptor locations, exposure points, and compliance points to the project manager at (803) 896-6245 prior to the start of exposure modeling. The tier analysis shall be done in accordance with the Risk Based Corrective Action (RBCA) Procedures Section.
   ii. SSTLs shall be calculated for each CoC and for each potential vapor, soil, and groundwater exposure pathway. Results shall be tabulated.

iii. Recommendations - The report shall include recommendations for further action (Tier III assessment, active remediation, intrinsic remediation, etc.) as warranted by the Tier 2 evaluation.

I. Tables

1. Soil Analytical data for the site shall be given in tabular form as Table 1. Soil borings should be designated with the 5-digit permit and boring id (e.g. 12345-SB1) on the chain of custody forms.
2. Potentiometric data for the site shall be listed in tabular form for this and all previous sampling events as Table 2. This should include top of casing elevations, screened intervals, depth to water, depth to product, and groundwater elevation for each well.
3. Laboratory data shall be summarized in a tabular form and must include current and historical data. Monitoring wells should be designated with the 5-digit permit number and the well id (e.g. 12345-MW1) on the chain of custody forms. Water supply wells should be designated with the 5-digit permit number and the well Id (e.g. 12345-WSW1). Surface water sampling locations should be designated with the 5-digit permit number and the location ID (e.g. 12345-SW1). Include groundwater measurements (temperature, pH, dissolved oxygen, specific conductance.)
4. Aquifer characteristics – hydraulic conductivity, seepage velocity, etc. shall be summarized on the appropriate DHEC form.
5. Site Conceptual Model - identify the data necessary to characterize the migration potential along the pathway and to quantify the potential impact.

J. Figures

1. Topographic Map- the report shall include a copy of the relevant portion of a USGS topographic map showing the site location and the locations of all public and private water supply wells and other potential receptors within 1,000 feet of the site or the down-gradient edge of the plume whichever is greater. The figure will be captioned with the facility name and address, UST Permit number, date, and bar scale. The map must include a north arrow. Label as Figure 1.

2. Site base map-
   i. Initial Groundwater Assessment: The site base map, labeled as Figure 2, shall be accurately scaled, but does not need to be surveyed. The map shall include the following:
      1. Legend including the facility name and address, UST Permit number and a bar scale.
      2. North arrow.
      3. Location of property lines.
      4. Streets or highways (indicate names and numbers).
      5. Location of buildings.
      6. Paved areas on or adjacent to site.
      7. Location of all present and former above ground and underground storage tanks and associated lines, pumps, and dispensers.
      8. Underground and aboveground utilities on or adjacent to site (sewer, water, telephone, gas, electric, etc.).

9. Location of any potential receptors.
10. Previous soil sampling locations.
11. Boring/Monitoring well location.

ii. Tier I Assessment: A scaled location map indicating the location of the site and any receptors within a 500-foot radius of the facility. The figure will be captioned with the facility name and address, UST Permit number, data, and bar scale. The map must include a north arrow. Label the map as Figure 2

iii. Tier II Assessment: a surveyed map (scaled to one inch equals fifty feet) that shows structures, underground utilities, potential receptors, USTs and associated piping and dispensers, and the locations of all sampling points and monitoring wells for a minimum distance of 500 by 500 feet with the UST facility in the center of the map. The figure will be captioned with the facility name and address, UST Permit number, data, and bar scale. The map must include a north arrow. Label the map as Figure 2

3. CoC site maps - the maps shall show the known and estimated horizontal extent of CoC in the soil and groundwater. Analytical values for the CoC shall be indicated at each sampling point. A separate map shall be used for each medium. Label the Soil CoC map as Figure 3 and the Groundwater CoC map as Figure 4.

The analytical data should be adjacent to the relative sampling point and should use the following format (additional parameters such as dissolved oxygen may be required):

Sample ID (MW# or SB#)
Benzene (µg/kg or µg/l)
Toluene (µg/kg or µg/l)
Ethylbenzene (µg/kg or µg/l)
Xylenes (µg/kg or µg/l)
Naphthalene (µg/kg or µg/l)
PAHs (µg/kg or µg/l)
Total Lead (µg/kg or µg/l)
RCRA Metals (µg/kg or µg/l)
* ETBA = 3,3-Dimethyl-1-butanol

EDB (µg/l)
1,2 DCA (µg/l)
ETBE (µg/l)
ETBA* (µg/l)
TAME (µg/l)
DIPE (µg/l)
TBF (µg/l)
TBA (µg/l)
TAA(µg/l)

Note: Not all parameters apply. If the laboratory analysis indicates all CoC at or below detection limits "ND" may be listed on the map beside that boring or monitoring well.

4. Site potentiometric map - the map shall indicate the water level elevations for each monitoring well and show the direction of groundwater flow for the surficial aquifer. (Tier I, Tier II, groundwater sampling events). Label as Figure 5 NOTE: Great care should be exercised in the use of computer contouring programs (e.g., Surfer®). Any unusual potentiometric features depicted on the map (e.g., sinks, mounds, abnormally steep gradients, etc.) must be explained.
5. Geologic cross-sections - the report shall include two cross-sections showing the lithology and stratigraphy of the site, and the known and estimated vertical extent of CoC in the soil and groundwater. The cross-sections shall intersect at a 90-degree angle if possible. One

cross-section shall include the source area and go down-gradient through as many wells as practicable with the highest concentrations. If a subsequent assessment is conducted to define the extent of CoC, the cross-sections will be updated to include the additional wells. (Tier II). Label as Figure 6.

6. A map or series of maps showing the predicted migration and attenuation of the CoC through time shall be presented. Total BTEX and TPH maps will not be used. (Tier II)

K. Appendices

1. Appendix A: Site Survey prepared and certified by a South Carolina Licensed Professional Land Surveyor (Tier I and Tier II) The surveyed base map should be plotted to an accuracy of 1-foot and include the following:
    i. Location of property lines, for the subject site and all affected adjacent properties
    ii. Streets and highways (indicate names)
    iii. Location of buildings
    iv. Paved areas on or adjacent to site
    v. Location of present and former above ground and underground storage tanks and associated lines, pumps, and dispensers.
    vi. Underground utilities on or adjacent to the site (sewer, water, gas, telephone, electric, etc.)
    vii. Location of any potential receptors
    viii. Soil boring locations
    ix. Monitoring well locations
    x. Survey datum location
    xi. Captioned with the facility name and address, UST Permit number, date, and bar scale.
    xii. North arrow
2. Appendix B: Sampling logs, laboratory data sheets and chain-of-custody forms. The analytical data packages will include the following information: sample results with units, method blank results, laboratory control sample recovery, matrix spike/matrix spike duplicate recoveries and relative percent differences, date and time of sample collection, date and time of sample receipt, date and time of sample extraction/preparation, date and time of sample analysis, dilution factors, pH of water samples, sample temperature at time of receipt, analytical methods used, method detection and quantification limits, problems and Site Rehabilitations, and applicable certifications. In addition, a laboratory data package must be included that should include raw data/instrument printouts, calibration data (initial and continuing), method and preparation blanks, field blanks, QA/QC data, digestion/extraction bench sheets, analytical logs, etc.
3. Appendix C: A copy of the relevant portion of the tax map depicting the location of the facility, all impacted properties, and all properties located adjacent to the impacted properties shall also be included. The property owner names, addresses, and phone numbers as well as a list of monitoring wells installed on each parcel should be included in tabular format. The report shall also include a scaled site vicinity map that indicates site location, surface drainage, structures, roads, receptors, and adjacent property uses. (Maps should not be integrated in the report.) List of adjacent property owner and well owners with their information.

4. Appendix D: Soil Boring/Field Screening logs for Temporary Wells and Screening Points to include DHEC Form 1903 for any abandoned temporary borings or wells.
5. Appendix E: Well completion logs and SCDHEC Form 1903 for all well(s);
6. Appendix F: Aquifer evaluation summary forms, data, graphs, equations
7. Appendix G: Disposal manifests
8. Appendix H: Local zoning regulations
9. Appendix I: If requested by the UST Management Division Manager, all fate and transport modeling assumptions, data input to each model, and all generated output data.
10. Appendix J: Copies of any access agreements obtained by the contractor to complete the required work.
11. Appendix K: Data verification checklist

SECTION B – DATA GENERATION AND ACQUISITION

B1 Sampling Process Design/Experimental Design

Each sampling process is described below. Since all information is potentially critical in nature, any problems with sample collection or access to the sites must be reported to the SC DHEC UST Project manager to determine what actions should be taken (resampling, etc.) Variability is expected in these samples due to nature of sampling for contamination. The project manager is also to be contacted when anomalies are found in the data or in the site itself.

IGWA Sampling Process Design:

1. Receptors
   A. Immediately upon locating any receptors screen them for hydrocarbons using a properly calibrated screening device. The Contractor's Addendum shall state what screening device will be used, along with the information required in Section B concerning calibration, maintenance and inspection.
   B. Obtain water samples for all water supply wells and surface water bodies within a 250-foot radius of the site. All municipal supply wells within a 1000-foot radius shall also have a sample collected and analyzed for the appropriate parameters (See Table 6)
   C. Notify the UST project manager at (803)-896-6241 as soon as possible if any water samples are collected.
   D. If field screening indicates the presence of hydrocarbons notify the UST project manager at (803)-896-6241 as soon as possible within 48 hours of detection and provide the name, address and a contact telephone number for all affected property owners. All field-screening and laboratory data for these receptors shall be included in the Report of Findings.

2. Monitoring Well or Boring Installation
   A. One permanent monitoring well constructed of 2 inch diameter PVC casing with a 10 foot length of PVC screen bracketing the water table shall be installed in the area showing the highest concentration of the compounds of concern above risk based screening levels as documented from

the previous soil and/or groundwater assessment. (Alternatively, the Department may specify a location.)

i. The well shall be installed under the direction of a SC Certified Well driller and in compliance with the SC Well Standards and Regulations, R. 61-71.
ii. The well shall require proper filter pack, grout, locking well cap, well pad at or above the land surface, data plate and a cover held in place with bolts or screws.
iii. Any wells installed in traffic areas must be flush-mounted. All other wells should be completed with a 1-foot minimum stick-up casing.
iv. The well must be properly developed so that the method used to develop it is capable of removing enough formation cuttings, drilling fluids, and additives to provide relatively sediment-free water samples that are typical of the aquifer.

B. During well installation, soil samples are to be collected for screening at five-foot intervals.

a. The Soil Lithology shall be documented on a drilling log. The following should be noted:

1. Color, using standard methods
2. soil type
3. rocks or minerals present,
4. split-spoon sample intervals
5. any organic vapor and field measurements
6. qualitative indication of soil conditions (dry, moist, water saturated and any staining of the soil by waste oil).
7. The drilling log should also note the depth of each sample submitted for analysis.

b. Enclose the boring log, DHEC Form 1903, and Water Well Record as attachments to the Report of Findings.
c. If groundwater is encountered within 25 feet of the surface, a monitoring well shall be installed. Additional footage up to 50 feet is allowed upon approval of the project manager.
d. With every monitoring well, a soil sample is also collected and analyzed for the appropriate parameters (see Table 6) using field-screening devices. The soil sample with the highest screening values (above the water table) is collected for lab analysis. If the soil samples are within 10% of each other the sample from the greatest depth is the one selected for lab analysis.
e. If groundwater is not encountered within 50 feet of the surface, the soil sample with the highest field screening value shall be collected for analysis.

C. Groundwater samples shall be collected after the well has been developed and allow to equilibrate for at least 24 hours or until the groundwater returns to the pre-drilling conditions.

a. Report the thickness of any free phase product as follows:

1. Record the distance from the top of the casing to the top of the free product.
2. Record the distance from the top of the casing to the product/water interface.
3. Subtract #1 from #2 to get the thickness of the free product.

4. If the free product exceeds 1/8 of an inch then the collection of a ground water sample is not necessary.
5. If no free product is encountered, the well shall be properly purged prior to sampling and the pH, temperature, DO, and specific conductance are reported.

D. Analyze soil and groundwater for the following parameters:

Groundwater	Soil
Benzene Toluene Ethylbenzene Xylenes Naphthalene Methyl tertiary butyl ether (MTBE) Polynuclear Aromatic Hydrocarbons (PAHs) Dissolved lead Ethylene Dibromide (EDB) 1,2-DCA	Benzene Toluene Ethylbenzene Xylenes Naphthalene Methyl tertiary butyl ether (MTBE) Polynuclear aromatic hydrocarbons (PAHs) Total lead
Waste Oil Groundwater	**Waste Oil Soil**
Benzene Toluene Ethylbenzene Xylenes Naphthalene Methyl tertiary butyl ether (MTBE) Polynuclear aromatic hydrocarbons (PAHs) Dissolved lead Ethylene Dibromide (EDB) 1,2-DCA 8 RCRA Metals, as total metals (arsenic, barium, cadmium, chromium, lead, mercury, selenium, and silver)	Benzene Toluene Ethylbenzene Xylenes Naphthalene Methyl tertiary butyl ether (MTBE) Polynuclear aromatic hydrocarbons (PAHs) 8 RCRA Metals, as total metals (arsenic, barium, cadmium, chromium, lead, mercury, selenium, and silver)

Table 6 Required Sampling Parameters

Tier I Sampling Process Design

1. Receptors:
   A. If receptors are identified that may be impacted, they shall be immediately screened for hydrocarbons using a properly calibrated organic vapor analyzer or other similar screening device.
      i. If field screening indicates the presence of hydrocarbons, notify the UST project manager as soon as possible within 48 hours of detection at (803)-896-6241 and provide the name, address, and a contact telephone number for all associated property owners.
   B. Water samples shall be obtained for all water supply wells within a 500-foot radius of the site.
   C. All field-screening and lab data for these receptors shall be included in the Tier 1 Report.

2. Soil Boring Installation, Sampling, and Analysis
   A. Install eight soil borings in the locations described below:
      i. UST Area-either adjacent to currently operating USTs or in the area formerly occupied by USTs:
         1. Two soil boring are installed to a depth of 25 feet or to the groundwater table, whichever is shallower.
         2. Soil samples shall be collected at five-foot intervals to the boring terminus, however **do not collect soil samples below the water table**.
      ii. Piping and Dispenser Area:
         1. Install five borings to a depth of ten feet or to the groundwater table, whichever is shallower, in the areas formerly occupied by the lines and product dispensers or adjacent to currently operating lines and dispensers.
         2. Soil samples shall be collected at two-foot intervals to the boring terminus, **however do not collect soil samples below the water table.**
      iii. Background Soil Boring
         1. One soil boring is to be installed at least 30 feet away from any USTs product lines, dispensers, and other potential sources of chemicals of concern. This boring is drilled to a depth of 10 feet or to the groundwater table, whichever is shallower.
            a. If the site is too small to allow a 30 foot separation, install this soil boring as far away from all USTs, product lines, dispensers, and other sources of contamination as possible.
         2. A soil sample is collected from below the "A" horizon, unless precluded by a shallow water table. **Do not collect soil samples below the water table.**
   B. The lithology of each collected soil sample is described and also screened for organic vapors.
      i. The method of field screening to be utilized is at the discretion of the contractor and shall be included in the Contractor's Addendum to this QAPP or the SOP shall be attached to the Addendum. Any technology that accomplishes Tier I Assessment performance standards and meets all regulatory requirements is acceptable.
      ii. A separate Geologist log should be used for each boring. These should be included as the appropriate appendix to the report. In this log record:
         3. Soil type
         4. Color of the soil using standard methods
         5. Rocks or minerals present
         6. Split-spoon sample intervals
         7. Field screening measurements
         8. Qualitative indication of soil conditions (dry, moist, saturated)
         9. Depth of each sample submitted for analysis.
         10. Name and signature of the person collecting the data.
         11. Location, depth and type of each sample submitted for analysis (see the next section).
   C. The following shall be submitted for analysis to a SC DHEC Certified Laboratory:
      i. One soil sample from each boring around the USTs, piping and dispensers shall be submitted to a SCDHEC certified laboratory for analysis for the following compounds: Benzene, Toluene, Ethylbenzene, Xylenes, Naphthalene, Methyl tertiary butyl ether

(MTBE), Polynuclear Aromatic Hydrocarbons (PAHs), and total lead. Samples from sites with a waste oil release shall also be analyzed for the 8 RCRA metals (lead, mercury, arsenic, barium, cadmium, chromium, selenium, and silver). Refer to Appendix F for collection and preservation methods.

ii. Two additional soil samples form the soil boring with the sample exhibiting the highest field-screening results will be submitted for the following analyses:
   1. One sample for grain size/hydrometer analysis to determine the sand, silt, and clay fractions at 0.074 mm (#200 screen) and at 0.004 mm, respectively.
   2. One sample shall be analyzed for total petroleum hydrocarbons using EPA method 8015B (DRO).

iii. The soil sample collected from the background soil boring shall be analyzed for total organic carbon. TOC must be performed using a TOC analyzer equipped with a soil sample attachment.

3. Monitoring Well Installation, Sampling, and Analysis
   A. A total of three 2-inch PVC-casing wells, with 10-foot screens bracketing the water table shall be installed and constructed in compliance with the SC Well Standards, R. 61-71. Each well shall require proper filter pack, grout, locking well cap, well pad at or above the land surface, data plate, and a cover held in place with bolts or screws.
   B. Locations
      i. The first monitoring well shall be installed in the immediate location of the soil boring that exhibited the highest field-screening concentration.
      ii. The second monitoring well shall be installed in the location of the background soil boring.
      iii. The third monitoring well shall be installed in a position on the site so that the direction of groundwater flow can be determined. This well may not be constructed in a location of a previous boring.
   C. Designation:
      i. Monitoring wells should be designated with the 5-digit permit number and the well id (e.g. 12345-MW1) on the chain of custody forms.
      ii. Water supply wells should be designated with the 5-digit permit number and the well Id (e.g. 12345-WSW1).
      iii. Surface water sampling locations should be designated with the 5-digit permit number and the location ID (e.g. 12345-SW1).
   D. Soil Sample Collection
      i. During well installation, soil samples are to be collected for screening at 5-foot intervals using a split-spoon or other discrete-interval, sampler. Samples collected from auger cuttings are not acceptable.
         1. The soil lithology of each sample is recorded on a Geologist's log with all the information previously described.
         2. The soil sample exhibiting the highest concentration of the chemicals of concern from each borehole shall be submitted for laboratory analysis as given in Table 3 unless
         3. All screening levels for all the samples are within 10%, then the deepest sample (ABOVE THE VADOSE ZONE) shall be submitted for analysis.

E. After well installation
   i. Wells must be properly developed in compliance with Regulation R.61-71. The method of development is at the discretion of the contractor and should be described in the Contractor's Addendum. Development is considered complete once enough solids, mud, and fluids have been removed so that the groundwater samples are typical of the shallow aquifer and relatively sediment free.
   ii. Survey the elevation of the Top of Well Casing for each well relative to an established datum on site. The datum shall be identified in the Report and its location marked on the site map.
   iii. The static water level shall be measured after the well has been developed and allowed to equilibrate for a minimum of 6 hours.
      1. If free product is present, the thickness shall be measured and recorded. The distance from the Top of Well Casing to the free product shall be measure to the nearest 0.01 foot and recorded.
      2. The collection of a groundwater sample is not necessary if free product in the well exceeds 0.01 foot (1/8 inch).
   iv. Groundwater samples
      1. Should only be collected after the wells have equilibrated for at least 6 hours after development.
      2. Well shall be purged prior to sampling.
         a. During purging, indicator parameters of pH, temperature, DO, and specific conductance shall be monitored and recorded.
         b. Purging is considered complete once the groundwater temperature and pH measurements have equilibrated.
         c. Field data sheets documenting purging volumes and measure parameters shall be included as a report attachment.
         d. Groundwater samples must be analyzed for the following parameters: Benzene, Toluene, Ethylbenzene, Xylenes, Naphthalene, Methyl tertiary butyl ether (MTBE), Polynuclear Aromatic Hydrocarbons (PAHs), total and dissolved lead, Ethylene Dibromide (EDB), 1,2-DCA. Samples from sites with a waste oil release shall also be analyzed for the 8 RCRA metals (lead, mercury, arsenic, barium, cadmium, chromium, selenium, and silver).

4. Aquifer Evaluation:
   a. Two separate aquifer slug tests shall be completed from different monitoring wells located outside of the UST area to determine aquifer characteristics.
   b. Data shall be collected, evaluated, and analyzed in accordance with industry standards (Horslev, Bower and Rice, etc.). The slug test shall be reported in the format as shown at www.scdhec.gov/eqc/lwm/forms/slugtest.pdf. The completed forms shall be attached to the report in the appropriate appendix (See Section A9).

Tier II Implementation

Soil Boring Installation, Sampling, and Analysis:

If not previously defined and quantified, the horizontal and vertical extent of impacted vadose zone soil contamination shall be fully delineated according to the following:

1. Install soil borings as follows:

   A. UST Area: Install soil borings to a depth of 25 feet or to the groundwater table, whichever is shallower, in the area formerly occupied by the USTs or adjacent to the currently operating USTs. Soil samples shall be collected at the surface and at five-foot intervals to the boring terminus. **DO NOT COLLECT SOIL SAMPLES BELOW THE WATER TABLE.**

   B. Piping and Dispenser Area: Install borings to a depth of ten feet or to the groundwater table, whichever is shallower, in the area formerly occupied by the lines and product dispensers or adjacent to the currently operating product lines and dispensers. Soil samples shall be collected at the surface and at two-foot intervals to the boring terminus. **DO NOT COLLECT SOIL SAMPLES BELOW THE WATER TABLE.**

   C. Background Soil Boring: Install one soil boring to a depth of 10 feet or to the groundwater table, whichever is shallower, at least thirty feet away from any USTs, product lines, dispensers, and other potential sources of CoC. If the site is too small to allow a separation of thirty feet, install this soil boring as far away from all USTs, product lines, dispensers, and other potential sources of CoC as possible. Collect a soil sample from below the A horizon unless precluded by a shallow water table. **DO NOT COLLECT SOIL SAMPLE BELOW THE WATER TABLE.**

   D. If the Extent of Soil Contamination is not defined by the borings described above, continue moving away from the area of contamination and installing borings to a depth of ten feet or to the groundwater table, whichever is shallower until the extent of soil contamination is defined. Soil samples shall be collected at the surface and at two-foot intervals to the boring terminus. **DO NOT COLLECT SOIL SAMPLES BELOW THE WATER TABLE.**

2. Soil Sample Descriptions:

   A. Describe the lithology for each soil sample collected during boring installation. Screen for organic vapors utilizing properly calibrated instruments (for other less volatile chemicals such as diesel or kerosene, alternative screening methods such as Field Gas Chromatograph, or immunoassay shall be used).

   B. On a separate log for each boring, record the soil type, color of soil using standard methods, rocks or minerals present, split-spoon sample intervals, and any organic vapor and field screening measurements. Additionally, a qualitative indication of soil conditions (dry, moist, wet, saturated) shall be noted on the logs. The boring logs shall note the depth of each sample submitted for analysis.

3. Requirements for the sample with the highest organic vapor measurement and the background sample:

A. If not previously conducted, the soil sample from each boring around the USTs, piping, dispensers, or other area with the highest organic vapor measurement shall be submitted to a Department certified laboratory for analysis of benzene, toluene, ethylbenzene, and xylenes (BTEX), naphthalene, PAHs, and lead. Samples from sites with a waste oil release shall also be analyzed for the 8 RCRA metals (lead, mercury, arsenic, barium, cadmium, chromium, selenium, and silver). All industry standard quality assurance and quality control methods shall be followed for sample collection and shipping (sample labels, sealed sample containers, completed chain of custody forms, shipment to the laboratory on ice). Refer to Appendix F for collection and preservation methods and Appendix E for analytical parameters and other requirements.

B. In addition to the samples described above, if not previously conducted, the one soil sample collected from the boring that exhibited the highest organic vapor measurement (not from a background boring) shall be forwarded to a certified laboratory for a grain size/hydrometer analysis to determine the sand, silt and clay fractions at 0.074 millimeters (#200 screen) and 0.004 millimeters respectively. A second soil sample shall be collected from above the groundwater table and analyzed for Total Petroleum Hydrocarbons (TPH) using Environmental Protection Agency (EPA) method 8015B (DRO). Additional soil samples above or below the water table may be submitted to a certified laboratory for grain/sieve analysis, TPH or TOC; however, the Department must pre-approve these samples.

C. In addition, a soil sample collected from the background soil boring shall be analyzed for total organic carbon (TOC). TOC must be performed using a TOC analyzer equipped with a soil sample attachment.

If the collection location, collection methods, laboratory methods, and/or detection limits for soil or groundwater are not below the risk-based screening levels (RBSL) as outlined in Appendix C, the Department cannot consider a closure or no further action decision.

4. Soil Boring Abandonment - All soil borings and screening points shall be properly abandoned with neat cement grout as regulated by the South Carolina Department of Labor, Licensing, and Regulation and in compliance with the South Carolina Well Standards and Regulations R.61-71, Section I.3.

5. Soil Leachability Model - If requested by the Department and not previously calculated, calculate the site-specific target levels (SSTLs) for each CoC in the soil. The Soil Leachability Model provided in the RBCA document shall be utilized unless an equivalent method is approved. Model input parameters and results shall be recorded on the appropriate forms found in the RBCA document. The calculated groundwater SSTLs shall be used to calculate soil SSTL values. If groundwater is less than 5 feet below ground surface (bgs), the Soil Leachability Model is not required.

6. Field Screening - The contractor shall propose in the Tier II Assessment plan appropriate sample collection methodology and field screening techniques based on the anticipated CoC. The method for sample collection and the field screening technique shall be at the discretion of the consultant. The objective of field screening is to adequately delineate the horizontal and vertical extent of any free phase petroleum and petroleum constituents in soil and groundwater and to use the field screening results to optimally locate the monitoring wells. Field screening locations, field sampling results, and proposed

monitoring well locations must be provided to the DHEC project manager for concurrence prior to the installation of permanent wells. As Methyl tert-Butyl Ether (MTBE) and 1,2-dichloroethane are not typically detected using standard screening instruments, the site rehabilitation contractor should select groundwater samples from selected screening points for certified laboratory analysis to ensure the horizontal and vertical extent of petroleum CoC are defined prior to installation of monitoring wells. Shallow screening should concentrate on defining the edges of the plume laterally (to include up gradient of the source), between the source and receptors (wells, surface waters, and utilities) to determine if a preferential pathway exists, and define strata with high hydraulic conductivity (sand stringers, gravel beds). **The contractor or their subcontractors shall not access private property, roads shall not be cleared, nor vegetation cut without the property owner's written consent. A copy of all agreements obtained from adjacent property owners should be included in the final report as the appropriate appendix.**

A. Methods -Typical methods of screening include one or a combination of the following:

i. Standard screening method will use an on-site semi-quantitative analytical method(s) that is capable of detecting benzene, naphthalene, and MtBE without sending screening samples to a certified laboratory. The method(s) will be capable of providing real-time on-site data; i.e. the data is obtained as borings are advanced or within 30 minutes of sample collection. Typical instrumentation includes, but is not limited to, field gas chromatography and/or other methods that would provide detection limits at or below the RBSL for benzene, naphthalene, and MtBE as a minimum. The method(s) used and the results will be submitted to the appropriate project manager for concurrence with proposed well locations before monitoring wells are installed and included in the report.

ii. Alternative screening method will ensure the extent of CoC is defined by submitting selected vertical and down-gradient groundwater samples to a certified laboratory for analysis. To be considered defined; the laboratory analysis should provide results at or below the RBSL for each CoC. The screening and laboratory results will be submitted to the appropriate project manager for concurrence before monitoring wells are installed and included in the report.

iii. Fractured Rock screening will use methods to identify individual fractures or zones containing a series of fractures. Fractures may be identified by use of calipers, gamma logs, temperature sensors, flow sensors, video cameras or other in-bore methods and techniques. The goal will be to locate all fractures 0.01 foot or larger, the orientation of the fracture(s) in an individual boring, and collating fractures over the entire site if multiple wells or borings are logged at the site as well as the reporting of this data. The method(s) used and the results will be submitted to the appropriate project manager to determine screen locations in the core hole or if the core hole should be abandoned.

B. Procedures –Typically the following steps will be used for groundwater screening:

i. Prior to advancing the first field screening point, the depth to groundwater shall be gauged in existing monitoring well(s).

ii. The initial field screening points should be installed in a radial pattern beginning in the immediate vicinity of the suspected source(s). These field screening points shall not be advanced deeper than five feet below the water table as gauged in existing wells and shall delineate the horizontal extent of free phase product and dissolved CoC at the water table. A series of temporary wells may be appropriate to define the extent of free phase product. If advancement refusal is encountered at multiple points, the UST Management Division Manager should be called to determine if field screening should be continued.

iii. Once the upper horizontal extent of the plume has been identified, a minimum of three deeper field screening points shall be advanced to determine the vertical extent of CoC in the soil and groundwater. These points shall be located along the plume centerline and shall be located at the source, the mid-point of the plume, and at the downgradient boundary of the plume. Water samples shall be screened for petroleum constituents at five-foot intervals and at any discernable changes in soil type with a properly calibrated field screening instrument. Changes in soil type can be identified utilizing well logs from existing monitoring wells or based on significant changes in the advancement rate of the field screening points. The deeper field screening points shall be terminated at advancement refusal or upon two consecutive samples below risk-based screening levels, whichever is shallower.

iv. The remaining field screening points for horizontal delineation shall be advanced to the depth that exhibited the highest results in the deeper field screening points. For example, if the highest concentration of petroleum is present in a sand stringer located eight feet below the water table, then additional field screening points shall target that stratigraphic interval.

v. The contractor shall provide the following QA/QC information in their Tier II Assessment plan.

a. FIELD INSTRUMENT - The brand name, model number, and serial number for each instrument utilized.

b. FIELD CALIBRATION - Written verification of the calibration of the instrument in the field for each day of reported analysis. This shall include the method of calibration, the concentration(s) and composition of the standard, and the existing conditions at the time of calibration (temperature, humidity, etc.). This calibration shall be accomplished using a standard indicative of the constituents being tested for (i.e., if analyzing for gasoline, calibrate the instrument with gasoline). This allows the method to provide measurements of the actual

concentration of the subject constituent (parts per million TPH as Gasoline) instead of span gas equivalents.

c. FIELD ANALYTICAL METHOD - This shall include protocols for sample collection and handling, as well as a detailed description of the field analysis. This shall also include information pertaining to the basis for the method and how it works.

7. Abandonment of temporary soil borings, field screening points, and core holes shall be by forced injection or tremie grouting of neat cement from the termination depth of the boring/point to within three inches of the surface or up to six inches in a high traffic area under the supervision of a South Carolina certified well driller. The upper three inches of each boring or up to six inches in a high traffic area that is not completed as a monitoring well, shall be filled with a material comparable to the surrounding material. For example, an asphalt plug should be placed in the upper three inches of a boring advanced in an asphalt parking lot, and a native soil/grass plug may be used in the upper three inches of a boring advanced in a grassy area.

   A. Any reference, or lack thereof, to any specific assessment or remedial technology does not constitute an endorsement or recommendation by the Department. Technologies are discussed for illustrative purposes only. Any technology, which accomplishes the Tier II performance standards and meets all regulatory requirements, is acceptable.

   B. Field screening results (OVA and laboratory data), along with proposed monitoring well locations, are to be faxed to the UST project manager at (803) 896-6241 before installation of monitoring wells for concurrence.

8. Install monitoring wells - The number and location of the monitoring wells shall be based on field screening results and with the concurrence of the UST Project Manager. The wells shall be installed in locations that fully delineate the horizontal and vertical extent of the groundwater CoC so that all exposure pathways can be monitored. The monitoring wells shall define the extent of the CoC to the maximum extent possible without the installation of unnecessary monitoring wells.

   A. Monitoring wells must be installed as regulated by the South Carolina Department of Labor, Licensing and Regulation and be constructed in compliance with South Carolina Well Standards, R.61-71. The well(s) must be installed under the direct supervision of a South Carolina certified permanent well driller and constructed in compliance with the South Carolina Well Standards and Regulations, R.61-71.H. The wells will require proper filter pack, grout, well identification plate, locking well cap, well pad constructed at or above ground level, and well cover held in place with bolts or screws. Any monitoring well(s) completed in traffic areas should be flush-mounted. All other wells should be completed with a one-foot minimum stick-up casing. The screen of all shallow monitoring wells must be installed so that the water table is bracketed. During well installation, soil samples are to be collected for screening at five-foot intervals. The soil lithology of each sample is to be recorded on a drilling log. The log shall contain the soil type, color of soil using standard methods, rocks or minerals present, split-spoon sample intervals, and any organic vapor and field screening measurements. Additionally, a qualitative

indication of soil conditions (dry, moist, wet, saturated) shall be noted on the log. The boring log shall note the depth of each sample submitted for analysis. Enclose the boring log in and signed DHEC Form 1903, *Water Well Record* in the appropriate appendices of the final report (See Section A9).

B. A minimum of three vertical assessment wells should be proposed unless the vertical extent of the contamination can be reasonably determined, or estimated, by another method or if the geology precludes the potential of vertical migration of the CoC. The deep wells are to be paired with water table wells (preferably the water table well with the highest concentration of CoC, another water table well in the center part of the down gradient portion of the plume, and the first clean down gradient well) to determine vertical extent of the CoC and the vertical hydraulic gradient. If the deeper zone is confined or semi-confined, lateral deep wells may be necessary to accurately characterize flow conditions in the deeper zone. The diameter of the deep well boring must be such that installation of the telescoping monitoring well can easily be accomplished. A six-inch ID well casing shall be advanced at least ten feet deeper than the bottom of the adjacent water table well screen or to the first confining unit, whichever is less. The well screen length shall typically be five feet. The well will be installed as regulated by the South Carolina Department of Labor, Licensing and Regulation and be constructed in compliance with South Carolina Well Standards, R.61-71.

C. Unnecessary monitoring wells shall not be installed (e.g., wells installed a significant distance beyond an existing temporary or permanent well that exhibits no appreciable concentration of CoC or deep wells installed where groundwater analyses indicated minimal concentration of CoC in the shallow monitoring wells).

D. All soil cuttings and groundwater generated during boring construction and monitoring well development/purging shall be temporarily stored in suitable, leakproof containers and removed for disposal within 90 days of generation.

E. If free product is not encountered, the well shall be properly developed prior to sampling and the pH, temperature, dissolved oxygen, and specific conductance measured and reported. Development will be considered complete once enough solids, drilling muds and fluids have been removed to provide relatively sediment-free groundwater samples that are typical of the aquifer.

F. Depth to water (or product) shall be determined using equipment capable of detecting the free product/water interface prior to development. If free product is present, the apparent thickness to 0.01-foot accuracy shall be measured.

9. Groundwater Sampling – Groundwater samples should be collected after each new groundwater-monitoring well is developed and allowed to equilibrate for a minimum of twenty-four (24) hours.

A. If the monitoring well contains free product exceeding 0.01 feet (1/8 inch), a sample shall not typically be collected. If free product is encountered, please contact the appropriate UST project

manager to determine if a product bail down test, collection of a product sample for product aging, or collection of a groundwater sample below the product will be required.

B. The well shall be purged prior to sampling with pH, temperature, dissolved oxygen, and specific conductance of the groundwater monitored and recorded. Purging is considered complete once the groundwater temperature and pH measurements have equilibrated. Field data sheets documenting purging volumes and parameters measured shall be included as an attachment to the report of findings. All purge water shall be containerized and disposed of as appropriate. Once laboratory analysis for soil and groundwater is received, the UST Management Division manager may be contacted to see if on site disposal is appropriate.

C. If the well is an existing well and the screen brackets the water table then the dissolved oxygen level will be recorded and the groundwater collected without purging the well.

D. If the well is an existing well and the screen does not bracket the water table (e.g., deep or pit cased well) then the well shall be purged prior to sampling and the pH, temperature, dissolved oxygen and specific conductance recorded. Purging is considered complete once the groundwater temperature and pH measurements have equilibrated. Field data sheets documenting purging volumes and parameters measured shall be included as an attachment to the report of findings. All purge water shall be containerized and disposed of as appropriate. Once laboratory analysis for soil and groundwater is received, the UST Management Division manager may be contacted to see if on site disposal is appropriate.

10. Groundwater Analysis - The groundwater samples shall be submitted to a South Carolina certified laboratory for analysis of:

Benzene
Toluene
Ethylbenzene
Xylenes
Naphthalene
Polynuclear aromatic hydrocarbons (PAHs)
Nitrates
Sulfates
Ferrous iron*
Methane*
Ethylene Dibromide (EDB)
1,2 Dichloroethane (1,2 DCA)

Oxygenates:
Methyl tert-Butyl Ether (MTBE)
3,3-Dimethyl-1-butanol (ETBA)
Ethyl Tert-butyl Ether (ETBE)
Tert-amyl Methyl Ether (TAME)
Tert-butyl Alcohol (TBA)
Tert-amyl Alcohol (TAA)
Tert-butyl Formate (TBF)
Ethyl Tert-butyl Alcohol (TBA)
Di-isoproyl Ether (DIPE)

Table 7 Groundwater Analytes
* Ferrous iron and Methane are non-standard methods. The SOP for these methods must be submitted with the contractor addendum.

A. Samples from sites with a waste oil release shall also be analyzed for the 8 RCRA metals, as total metals (lead, mercury, arsenic, barium, cadmium, chromium, selenium, and silver).

B. All industry and South Carolina certification quality assurance and quality control methods, as well as those listed in the EPA approved methodology and this QAPP, shall be followed for shipping (sample labels, sealed sample containers, completed chain of custody forms, shipment to the laboratory on ice).

Note: The elapsed time between the collection date of the groundwater samples and the received date of the report will be no more than 60 days.

11. Aquifer Characteristics - Determine aquifer characteristics. The completion of a pumping test is preferred whenever possible. In cases where a pumping test cannot be conducted because of technical (e.g., well yields are too low) or financial (e.g., wastewater disposal is cost-prohibitive) reasons, aquifer slug tests shall be acceptable. All wastewater generated during aquifer tests shall be properly containerized and disposed.

    A. **Slug Tests** – Typically at least three separate slug tests shall be conducted in different on-site wells to determine aquifer characteristics unless otherwise specified by the Department. At least one slug test shall be conducted in a deep well. Data shall be analyzed in accordance with industry standards (Horslev, Bower and Rice, etc.). The slug test shall be reported on the Summary of Slug Test form. The form and all applicable date must be included in the appropriate appendix in the final report.

    B. **Pumping Test -** To ensure that the pumping test data is representative, the test shall be conducted using a sufficient pumping rate and duration to stress the aquifer. Therefore, the pumping test shall have a+ duration of at least six hours to a maximum of twenty-four hours based on site-specific data. Data shall be reported and analyzed in accordance with industry standards. Generation of more than 5,000 gallons of wastewater during a pumping test will require a general discharge permit from the Bureau of Water.

12. Free Product Recovery Test - If 0.2 foot or 2.4 inches or more of free product is encountered in a non-temporary monitoring well, then a recovery test or bail down test shall be conducted using current industry standards to determine free product recovery rates and true thickness. This data shall be submitted on a graph as an appendix to the report.

13. CoC Fate and Transport - If requested by the Department and not previously calculated, calculate the SSTLs for each CoC for groundwater and for vapors. The contractor shall specify in the Contractor's Addendum the model or method proposed if fate and transport modeling is requested by the UST Management Division manager. The completion of a relatively simple mathematical and/or algebraic or semi-analytical expression shall be preferred initially. Where a completed pathway may exist, a more complex computer model shall be used.

    A. Mathematical and/or algebraic or semi-analytical expressions. For groundwater, the contractor shall utilize Domenico's Fate and Transport Model provided in Appendix G or an equivalent model. RBSL values should not be recalculated, if values are listed in Appendix C.

B. Computer fate and transport modeling. For groundwater, the contractor shall utilize SOLUTE, AT123D, BIOPLUME-II, or an equivalent model. For vapors, the contractor shall utilize Farmer, Thibodeaux-Hwang, SeSoil, Jury, Box, or an equivalent model.

14. Tier 2 Risk Evaluation - Use the historical data and the information obtained during this scope of work to perform a Tier 2 Risk Evaluation. This evaluation includes, but is not limited to, the establishment of exposure points (current and future/potential receptors), site-specific target levels, and points of compliance and recommendations for future actions. This evaluation shall be performed in accordance with the RBCA document. The UST Project Manager must approve the receptor(s) prior to modeling and the model(s) to be used. Only one tier evaluation will be required for a facility unless new receptor(s) are identified.

15. Final Survey - A final survey to tie-in field screening points and permanent monitoring well locations and elevations to a common elevation datum shall be performed. A subsequent survey may be performed by the contractor.

16. Waste Disposal - Sample, analyze, transport within 90 days of generation, and dispose of any soil or wastewater generated in accordance with the Department's guidelines. Sampling and disposal shall be the responsibility of the contractor. It is the responsibility of the contractor to acquire signatures for the disposal manifests. Categories of waste disposal include:

    A. Wastewater - Water generated from well development, purging and/or sampling, or water generated from aquifer testing

    B. Free Product - any product recovered from the sub-surface.

    C. Soil - soil that requires treatment in concurrence with the Department.

17. Management of data and method - If the analytical method detection limits for soil or groundwater are above the risk-based screening levels (RBSL) as outlined in Appendix C, or the horizontal and vertical extent of the plume are not defined, the Department cannot consider a closure or no further action decision. The UST project manager shall be notified at (803) 896-6241 at the earliest opportunity if any water samples are collected within a 500-foot radius of the edge of the plume.

Site Rehabilitation

This section outlines the criteria for Site Rehabilitation of petroleum releases from regulated underground storage tanks (UST) and is designed to meet the applicable requirements of the South Carolina Underground Storage Tank Control Regulations, R.61-92 Part 280, and the SUPERB Site Rehabilitation and Fund Access Regulations, R.61-98.
Confirmed releases of petroleum or petroleum products where concentrations of Chemicals of Concern (CoC) are documented to be in excess of risk-based screening levels (RBSLs) require Site Rehabilitation. The SSTL is the maximum concentration each CoC can exist above the RBSL to ensure current or potential receptors are not adversely affected.

Based on the concentration of each CoC and its potential risk to receptors, two processes of Site Rehabilitation are possible: A) active Site Rehabilitation and B) intrinsic remediation or natural attenuation.

1. Active Site Rehabilitation – This term is synonymous with active remediation and refers to physical actions taken to reduce the concentrations of CoC. Active Site Rehabilitation is applicable where:

   A. The concentration of any CoC exceeds the SSTL and must be reduced to prevent an impact to an actual or potential receptor;

   B. Free phase product is present with a thickness greater than 0.01 feet or 1/8 inch; or

   C. The plume continues to increase in size, CoC continue to migrate away from the source, or the concentration of any individual CoC is increasing.

2. Intrinsic Remediation or Natural Attenuation - These terms refer to the naturally occurring microbial and fate and transport processes that results in a reduction of the total mass of hydrocarbons. Intrinsic remediation is applicable where:

   A. The concentration of any CoC exceeds the RBSL but is less than the SSTL;

   B. Measurable free product is not present;

   C. The CoC plume is at or approaching equilibrium (i.e., the advancement of the plume is slowing down), and the concentration of a CoC is not increasing at any point;

   D. The predicted impact on actual or potential receptors does not exceed the RBSL at any time (i.e., no predicted risk to human health or the environment); and

   E. All conditions for intrinsic remediation can be verified in 18 months or less.

An intrinsic approach may need to be upgraded to active Site Rehabilitation if the above conditions cannot be demonstrated; a new or potential receptor is identified, or if there is a change in land use or zoning ordinances.

ACTIVE SITE REHABILITATION PROCEDURES

Once the extent and severity of contamination is identified and a cleanup goal or SSTL is established, the SSTL mass of petroleum to be removed is established.

1. Data collection - Prior to implementation of Site Rehabilitation, the horizontal and vertical extent of CoC in the soil and groundwater, aquifer characteristics, and SSTLs are determined. This data is typically collected during Tier 1, Tier 2, and Tier 3 assessments as described in this document.

2. Site Rehabilitation Plan and Permit Preparation – The contractor should submit a Site Rehabilitation Plan and any necessary permit applications to the Department in accordance with the schedule outlined by the UST Management Division. The Site Rehabilitation Plan should include, at a minimum:

   A. A brief description of how the proposed technology (ies) will reduce the concentrations of CoC at each compliance well to the established Site-Specific Target Level (SSTL). Scientific models, computations, and/or data from other case studies should be included which establish a predicted radius of influence and justify the proposed locations of recovery or injection wells, trenches, and other features.

   B. Proposed construction details for all temporary and permanent wells, trenches, or other features that will be needed to implement the Site Rehabilitation. Their locations should be depicted on a site map in addition to other pre-existing features such as monitoring wells, and aboveground structures. Please note that the locations of proposed construction should be discussed with the property owner with minimal disruption to any existing commercial or residential uses.

   C. A copy of the relevant portion of the tax map shall be included with a list of the property owner's names, tax map numbers, and mailing addresses for each property that: a) is currently impacted by petroleum, b) may become impacted by petroleum, c) has monitoring wells on it, or d) adjoins a property that fits in categories a), b), or c).

   D. A brief description of how any waste materials (wastewater, impacted soil, air) that may be generated will be handled.

   E. A brief description of any potential exposure that the contractor or other citizens may face during the cleanup process and how these potential exposures will be managed to prevent any risk to human health.

   F. A detailed monitoring proposal that complies with that required in the bid specification.

   G. A detailed description of the methods that will be used for deactivating and removing any wells and equipment added as a part of site rehabilitation.

   H. An implementation schedule should be provided that outlines when the contractor will: a) initiate and complete construction, b) submit the baseline monitoring report, c) initiate Site Rehabilitation(s), d) submit quarterly Site Rehabilitation system evaluation reports, e) reach SSTLs, f) complete the post-remediation verification monitoring, and g) remove all equipment and abandon all wells as required by the bid specification. It is recognized that items e), f), and g) are estimates.

   I. A completed Bureau of Air Quality Modeling Form should be submitted with the CAP if air emissions will be generated.

   J. An Underground Injection Control Permit Application is required if injection of any solid, liquid, or gas (including ambient air) is proposed. If the injectate includes nutrients, microorganisms, or

chemicals, a review of its safety by the state toxicologist is necessary unless previously conducted. If it has already been reviewed for another site, please provide a copy of the review memorandum.

3. Bioremediation Safety Guidelines – To evaluate the safety of a proposed injectate, the following information, at a minimum, is needed:

   A. Manufacturers name, address, telephone number, and authorized representative for data disclosure.

   B. SCDHEC project manager and telephone number.

   C. Site contact person, address, and telephone number.

   D. Contractor applying product, contact person, address, and telephone number.

   E. A map depicting the site and the locations of all local private and public water supply wells.

   F. Analytical results from a certified laboratory quantifying the CoC present in the soil.

   G. Genus/species/strain of microorganism(s) contained in product (if requested, this will be maintained as confidential information).

   H. Identity of specific nutrients and other additives contained in the product (if requested, this will be maintained as confidential information).

   I. Documentation of evidence from authoritative technical references (e.g., Bergey's, etc.) that the microorganisms are not pathogenic to animals or humans.

   J. Documentation that microorganisms are naturally occurring in the immediate or similar environment.

   K. Documentation of specific degradation products expected.

   L. Documentation of migratory potential of contaminants and degradation products in soil groundwater, and air.

   M. Complete description of the bioremediation process on a site (e.g., application of the product to soil and/or groundwater, aeration of the soil, procedures needed to maintain microbial growth and chemical degradation).

   N. Complete description of all potential exposure avenues to humans, animals, and the environment of contaminants and contaminated materials.

O. Disposal procedures for all contaminated materials, which result from the bioremediation process.

4. Public Notice - Pursuant to the South Carolina Underground Storage Tank Control Regulations, R.61-92, Section 280.67, the Department provides notice to the public of pending Site Rehabilitations. The method of notification is tailored in each situation to reach those members of the public directly and indirectly affected by the planned Site Rehabilitation. Notices may be posted at or in the vicinity of the site. Notices may also be provided to the owner or operator of the underground storage tanks that are suspected to be the source, and owners of local property that: a) is currently impacted by petroleum, b) may become impacted by petroleum, c) has monitoring wells on it, or d) adjoins to property that fits in categories a), b), or c). The duration of the public notice should be long enough to give the public a chance to provide their comments (usually 14 to 30 days). If the comments and questions received cannot be adequately answered on an individual basis or if a large number of people have questions, a meeting may be scheduled in their local area at a time suitable to encourage participation. The UST owner or operator and/or the site rehabilitation contractor may be invited to the meeting to further discuss the rehabilitation actions proposed in the Site Rehabilitation Plan.

5. Notice to Proceed – Once the public notice process and all permits have been issued, the Department will issue a notice to proceed with Site Rehabilitation. This notice does not imply any endorsement that the proposed method will work or that it will achieve the standards (SSTLs) in the most efficient manner possible. The contractor is responsible for ensuring that the system achieves the required results and for any necessary additions or modifications to the system to achieve the required results. The Department should receive prior notification of any proposed changes (other than changing pumping, injection, or air pressure rates). A comprehensive round of groundwater samples will be required prior to initiation of the treatment process outlined in the Site Rehabilitation Plan. Analytical parameters will be specified in the bid specification.

6. Site Rehabilitation System Evaluations – Quarterly Site Rehabilitation system evaluations (CASE) and monitoring reports documenting progress must be submitted. The reporting schedule will be outlined in the bid specification. Each CASE should include the following, at a minimum:

A. Brief description of any construction or treatment system adjustments completed by the site rehabilitation contractor since the previous report. Well completion logs and treatment system construction schematics may be included in the appendix.

B. A table summarizing the measurement of any observed free product and groundwater potentiometric data. In addition, a brief description and a map depicting the most current groundwater flow direction and gradient and any observed historical trends, should be included.

C. A table summarizing the historical and current analytical results from all monitoring wells, which are required to be sampled pursuant to the bid specification. Cleanup goals or SSTLs should also be noted. The total mass exceeding SSTL should be calculated in accordance with the formula and example included in Section H. Negative values should not be used.

D. A brief discussion should be included which describes the contractors' on-going efforts to maximize the time efficiency of the treatment process.

E. A revised implementation schedule should be included which more accurately estimates when the cleanup process will be complete.

F. Site maps, analytical results, well purging records, and any applicable soil or water disposal manifests should be included in the appendix.

7. Calculation of % mass removed– The following formula will be used to calculate the percent total mass reduction: total mass above the cleanup goal or SSTLs from initial sampling less total mass above cleanup goal or SSTLs from subsequent sampling divided by total mass above cleanup goal or SSTLs from initial sampling.

The following is an example to demonstrate the CoC Mass Reduction Calculation:

Well		Benzene	Toluene	Ethylbenzene	Xylene	MTBE	Naphthalene	Mass>SSTL
MW-1	Initial [A]	7,500	4,000	2,000	15,000	3,000	1,000	[A]
	SSTL [B]	10	2,000	1,400	10,000	80	50	[B]
	Initial > SSTL [C]	7,490	2,000	600	5,000	2,920	950	18,860 [C]
	Subsequent [D]	3,000	1,000	900	13,000	2,000	5	[D]
	SSTL [E]	10	2,000	1,400	10,000	80	50	[E]
	Subsequent > SSTL [F]	2,990	0	0	3,000	1,920	0	7,910 [F]
MW-4	Initial [G]	150	400	50	250	300	25	[G]
	SSTL [H]	5	400	50	250	40	25	[H]
	Initial > SSTL [I]	145	0	0	0	260	0	405 [I]
	Subsequent [J]	100	100	1	1	100	1	[J]
	SSTL [K]	5	400	50	250	40	25	[K]
	Subsequent > SSTL [L]	95	0	0	0	60	0	155 [L]
Totals	Initial > SSTL [M]	(sum of initial mass above SSTL for all wells) (C+I)						19,365 [M]
	Subsequent > SSTL [N]	(sum of subsequent mass above SSTL for all wells) (F+L)						8,065 [N]

Table 8 CoC Mass Reduction Calculation Example

Notes:

- *** If subsequent sampling indicates a CoC concentration value at or below the cleanup goal or SSTL and/or a CoC concentration below laboratory detection level but reporting level less than cleanup goal or SSTL for any constituent, the value for the mass reduction will be 0 (no negative numbers).**
- **If subsequent sampling indicates a CoC concentration below the laboratory detection level but the reporting limit is greater than cleanup goal or SSTL, the value for any constituent will be the analytical reporting limit.**

Mass Reduction Calculation
CoC Mass Reduction = (M-N) = (19,365-8,065) = 0.5835 *100 = 58.35% CoC Reduction (M) 19,365

8. Completion of Active Site Rehabilitation – Once analytical results indicate that the concentration of each CoC at each monitoring point is below the cleanup goal or SSTL and the conditions in the site rehabilitation specification have been met, the contractor may request authorization from the

Department to stop the treatment system. Once granted, the contractor will begin the post-remediation monitoring and verification cycle. The Department may require the installation of verification borings and wells. The number of verification points, analytical parameters, and the duration of the post-remediation verification process are specified in the site rehabilitation specification.

9. Once the verification process is complete and all concentrations of CoC are confirmed to remain less than the cleanup goal or SSTL, the Department will issue approval for the contractor to remove their Site Rehabilitation equipment, abandon pipe runs, and abandon monitoring wells.

INTRINSIC SITE REHABILITATION PROCEDURES

1. Data collection - Prior to implementation of Site Rehabilitation, the horizontal and vertical extent of CoC in the soil and groundwater, aquifer characteristics, and SSTLs are determined. This data is typically collected during Tier 1, Tier 2, and Tier 3 assessments as described in this document.

2. Basics of Intrinsic Remediation – Intrinsic remediation refers to the naturally occurring microbial and fate and transport processes that results in a reduction of the total mass of hydrocarbons. A monitoring program is implemented to gather the necessary data to support that intrinsic remediation is reducing the concentrations of CoC. Once the evidence documents that site conditions are suitable and that intrinsic remediation is taking place, an intrinsic Site Rehabilitation report (ICAR) is then prepared to justify the issuance of a Conditional No Further Action and the discontinuation of monitoring.

3. Monitoring - The primary evidence for intrinsic remediation shall be the observed reduction in the concentration of each CoC in each well and a corresponding reduction in the overall size and geometry of the plume.

4. Secondary evidence for intrinsic remediation includes further computer modeling of solute and transport rates or estimates of assimilative capacity, and the collection of geochemical parameters that support the depletion of nutrients or the generation of by-products as a result of biological or chemical processes. The most common geochemical parameters include: dissolved oxygen, temperature, nitrate, sulfate, ferrous iron, and methane. Other less common geochemical parameters that may also help include: total organic carbon, redox potential, soluble salts, buffer index, soluble potassium, sodium, calcium, sulfur, boron, copper, zinc, cation exchange capacity, exchangeable ions, soluble phosphorous, and soluble manganese.

5. A monitoring well located hydraulically down gradient of the source is always needed to verify that the plume is not continuing to migrate. Initially all monitoring wells should be sampled for all **CoC, which** have concentrations exceeding the RBSL, and for secondary geochemical parameters. Accepted analytical methodologies are outlined in Appendix E. The data from the first sampling event should be evaluated for evidence of CoC reductions, plume migration, and biological or geochemical evidence of intrinsic remediation such as oxidation, de-nitrification, or methanogenesis. Sampling parameters for future events should be tailored to address those biological and geochemical parameters that provide the strongest evidence of intrinsic remediation.

6. Typically, quarterly sampling during the first year is needed to establish seasonal variability. The frequency after the fourth quarter should be established based on a review of all historical water table fluctuations and CoC variations.

7. Intrinsic Monitoring Report **- Each** monitoring report should include the following:

   A. A data table summarizing the measurement of any groundwater potentiometric data. In addition, a brief description and a site map depicting the most current groundwater flow direction and gradient and any observed historical trends should be included.

   B. A data table summarizing the historical and current analytical results of CoC and geochemical parameters from all monitoring wells, which were sampled.

   C. A brief description of any observed historical CoC concentration trends and any geochemical evidence supporting intrinsic remediation.

   D. Topographic and site maps depicting the locations of former or existing underground storage tanks lines and dispensers, monitoring wells, buildings, and other structures.

   E. Analytical results, well purging records, and any applicable soil or water disposal manifests should be included in the appendix.

8. Intrinsic Site Rehabilitation Plan - Once the monitoring program has gathered the needed evidence that supports that site conditions are suitable and that intrinsic remediation is taking place, an intrinsic Site Rehabilitation plan (ICAP) is prepared to justify the issuance of a "Conditional No Further Action" decision, and the discontinuation of monitoring. The ICAP contains the elements for the Intrinsic Monitoring Report and the following:

   A. A copy of the relevant portion of the tax map shall be included with a list of the property owner's names, tax map numbers, and mailing addresses for each property that: a) is currently impacted by petroleum, b) may become impacted by petroleum, c) has monitoring wells on it, or d) adjoins to property that fits in categories a), b), or c).

   B. All available data should be used to estimate how long intrinsic remediation will take to restore the soil and groundwater to risk-based screening levels. These estimates may be derived by extrapolation of documented decreasing trends, or through calibration of scientific models using historical CoC and geochemical data. All input parameters and assumptions should be clearly identified.

   C. The receptor survey should be verified and the local city or county authorities should be contacted for an update on the current applicable zoning and land use ordinances. A brief discussion of the findings should be included.

D. If the data supports that no unacceptable risk will result by leaving the CoC in place to naturally degrade during the estimated clean-up time frame, the report should recommend the termination of monitoring.

NO FURTHER ACTION DECISION

1. A "No Further Action" decision may be issued by the Department if the concentration of each CoC is at or below the RBSL. The samples that support the decision should be:

   A. Collected from the location(s) deemed most likely to represent the worst case CoC;

   B. Analyzed for appropriate parameters by a laboratory certified in the state of South Carolina for those parameters; and

   C. Collected in accordance with industry standards for quality assurance and quality control.

2. If a Site Rehabilitation system was used, the "No Further Action" decision will only be issued after completion of a post-remediation monitoring program, which confirms that concentrations of each CoC remain below RBSL.

CONDITIONAL NO FURTHER ACTION DECISION

1. Pursuant to The SUPERB Site Rehabilitation and Fund Access Regulations, R.61-98, a "Conditional No Further Action" decision can be granted once the following has been demonstrated:

   A. the SSTL have been met;

   B. the CoC have reached equilibrium or are not moving at a significant rate;

   C. concentrations of CoC are not increasing;

   D. no unacceptable risk to human health, safety, or the environment exists; and

   E. concentrations of CoC will not exceed RBSL at the exposure point or receptor.

2. Prior to issuance of a "Conditional No Further Action" letter, the Department provides notice to the public to solicit comments and concerns. The method of notification is tailored in each situation to reach those members of the public directly and indirectly affected by the proposed decision.

3. A "Conditional No Further Action" letter is based on site-specific conditions and the current and reasonably anticipated future use of the site. The letter will outline all land use assumptions and conditions at the time the decision is made. The Department will be notified by the underground storage tank owner or operator within 30 days of any changes in the listed assumptions or conditions so that the potential risk can be re-evaluated. Examples of assumptions or conditions that may be attached to a "Conditional No Further Action" letter include, but are not limited to:

A. The property is zoned for commercial use and should remain commercial in the future.

B. Water wells are not currently installed in the impacted area and should not be installed in that area in the future.

C. Local ordinance precludes the installation of potable wells.

The Department maintains a Registry of Releases for all "Conditional No Further Action" decisions. The longitude and latitude from the Geodetic Information System, local tax map number, and street address of each closed conditional release is available at the Department's Freedom of Information office (803) 898-3882. If a person is later able to demonstrate all CoC are below the RBSL, then that person may request that the release be removed from the registry of releases and a "No Further Action" decision be issued by the Department.

WELL ABANDONMENT

Once the UST owner or operator is notified of a "No Further Action" or a "Conditional No Further Action" decision, abandonment of the monitoring wells is suggested to minimize the possibility of leakage of future spills into the groundwater aquifer. Abandonment shall be by a South Carolina certified well driller in accordance with the South Carolina Well Standards and Regulations, R.61-71. The UST owner or operator may also choose to keep these wells for future monitoring purposes. If this option is chosen, the UST owner or operator becomes responsible for the future maintenance and abandonment of the monitoring wells.

AFVR (Aggressive Fluid Vapor Recovery)

Aggressive Fluid Vapor Recovery (AFVR) is a technology that is used for rapid recovery of liquid phase hydrocarbons such as gasoline or diesel fuel. AFVR uses a high-pressure vacuum to recover both fluids (groundwater and liquid phase hydrocarbons) and vapor phase hydrocarbons from monitoring or recovery wells.

1. Prior to the initiation of the event, fluid levels and free product thickness measurements shall be recorded in the wells designated by the Department as potentially containing free product.

2. On a site-specific basis, the duration of the recovery event may be greater than the allotted eight-hour time frame. Additional mobilizations may be necessary in the event that the recovery tanker becomes filled and disposal is necessary at that time, in order to continue the recovery process. In this instance, an additional mobilization may be added. In these instances, prior approval must be obtained from the UST Management Division.

3. Magnehelic gauges must be installed on the extraction wells and monitoring wells immediately surrounding the extraction wells. The range of each magnehilic gauge should be selected based on the expected pressure range. For example, one would expect perimeter wells to have less vacuum than the extraction wells and smaller graduate interval may be necessary.

4. Connect the vacuum truck or treatment unit to a grounded metal object with a ground lead to ensure that static electricity does not result in an explosion hazard.

5. The AFVR should be completed by establishing a vacuum on the subsurface through the existing monitoring wells. The unit must be capable of providing a minimum airflow of 250 cubic feet per minute (CPM) at 25 inches Mercury vacuum. An airtight seal must be established on the top of each extraction well. Drop tubes inserted in the well(s) should have an inside diameter of at least one (1) inch and should initially be installed six inches below the bottom of the product or the top of the well screen whichever is deeper. The drop tubes should be lowered deeper in the well only if the well exhibits slow recovery (repeatedly goes dry) or if it is deemed necessary to establish a steeper hydraulic gradient to enhance free product migration toward the well. The goal is to maximize the recovery of free product and petroleum vapors in the capillary fringe and minimize the recovery of ground water.

6. The AFVR should be completed as one continuous event (typically eight hours in length). The AFVR shall not be terminated early without prior approval from SCDHEC. The contractor must have sufficient materials and pressure to simultaneously recover from a minimum of three wells located within a 50-foot radius of each other. If all wells requiring AFVR are not located within a 50-foot radius of each other, AFVR activities may rotate between areas during the event. Recovery shall concentrate on the well(s) that demonstrate the highest free product removal rate, unless otherwise directed by the Department.

7. The airflow rate, volatile air emission concentrations, and magnehelic gauge readings shall be measured and recorded at a minimum every thirty minutes through the duration of the recovery event.

8. If the air emissions are anticipated to have an adverse impact in the vicinity of the AFVR, the Department may require off-gas treatment.

9. A report documenting the recovery event shall be submitted within thirty days from the date of the event. The report shall include the following:

   A. A brief description of the completed work scope and any relevant descriptions pertaining to the data tables.

   B. A table summarizing the airflow (in CPM) and volatile concentrations collected from the stack of the truck every thirty minutes through the duration of the event. The table shall also document which well(s) were being recovered from during that time interval.

   C. A table summarizing the magnehelic gauge measurements from all applicable wells on a thirty-minute time interval.

   D. The total volume of water recovered (gallons).

E. The total volume of free phase product recovered (typically measured with a product/water interface device inserted into the top of the tanker at the completion of the event and then converted to an approximate volume).

F. The total mass of petroleum removed as vapor. This is calculated based on the airflow rate and the concentration of vapor.

G. A table documenting the free product thickness in each well before and after the recovery event.

H. Scaled base map depicting the location of the extraction wells and the surrounding wells equipped with magnehelic gauges.

I. Recovered free phase petroleum and groundwater must be accepted by a permitted treatment facility. There can be no spillage or leakage in transport. A copy of the disposal manifest from the receiving facility that clearly designates the quantity received must be included as an appendix to the final report.

NOTE: These specifications detail the specific tasks required to successfully complete the scope of work for AFVR. These specifications do not include general implied tasks as required by Federal, State or local governments (OSHA 40-hour training, Health and Safety Plans, business licenses, etc.).

Groundwater Sampling Events

Groundwater samples should be collected after each new groundwater-monitoring well is developed and allowed to equilibrate for a minimum of twenty-four (24) hours.

1. If the monitoring well contains free product exceeding 0.01 feet (1/8 inch), a sample shall not typically be collected. If free product is encountered, please contact the appropriate UST project to determine if a product bail down test, collection of a product sample for product aging, or collection of a groundwater sample below the product will be required.

2. The well shall be purged prior to sampling with pH, temperature, dissolved oxygen, and specific conductance of the groundwater monitored and recorded. Purging is considered complete once the groundwater temperature and pH measurements have equilibrated. Field data sheets documenting purging volumes and parameters measured shall be included as an attachment to the report of findings. All purge water shall be containerized and disposed of as appropriate. Once laboratory analysis for soil and groundwater is received, the UST Management Division manager may be contacted to see if on site disposal is appropriate.

3. If the well is an existing well and the screen brackets the water table then the dissolved oxygen level will be recorded and the groundwater collected without purging the well.

4. If the well is an existing well and the screen does not bracket the water table (e.g., deep or pit cased well) then the well shall be purged prior to sampling and the pH, temperature, dissolved oxygen and

specific conductance recorded. Purging is considered complete once the groundwater temperature and pH measurements have equilibrated. Field data sheets documenting purging volumes and parameters measured shall be included as an attachment to the report of findings. All purge water shall be containerized and disposed of as appropriate. Once laboratory analysis for soil and groundwater is received, the UST Management Division manager may be contacted to see if on site disposal is appropriate.

5. Groundwater Analysis - The groundwater samples shall be submitted to a South Carolina certified laboratory for analysis of those parameters requested by the UST Management Division.

6. All industry standard quality assurance and quality control methods shall be followed for shipping (sample labels, sealed sample containers, completed chain of custody forms, shipment to the laboratory on ice).

The elapsed time between the collection date of the groundwater samples and the received date of the report will be no more than 60 days.

Monitoring Well Installations

Additional monitoring wells are installed in instances where additional wells are required for plume delineation.

1. If the location(s) for permanent monitoring wells cannot be determined without field screening, the contractor will utilize a field sampling technique (vapor or water sample collection) and analyze each sample in the field with an appropriate screening methodology. The method for sample collection and the field screening technique (FST) shall be included in the required Contractor Addendum. The field screening shall serve as a tool to determine adequate locations for monitoring wells addressing horizontal and/or vertical extent of the petroleum constituents in soil and groundwater during one direct push/drill rig mobilization. The contractor shall use an appropriate technique for each site. The results of the field screening will be to optimally locate and reduce the number of permanent monitoring wells. Contractors are allowed per project manager's request to collect groundwater samples from existing shallow wells, deep wells, and down gradient screening points for laboratory analysis to ensure the entire plume is delineated. Field screening locations, field sampling results, any laboratory analyses, and proposed permanent monitoring well locations are to be faxed or e-mailed to the DHEC project manager for concurrence prior to the installation of permanent wells. Abandonment of temporary soil borings, field screening points, and core holes shall be by forced injection or tremie grouting with neat cement from the termination depth of the boring/point to within three inches of the surface under the supervision of a South Carolina certified well driller. The upper three inches of each boring that is not completed as a monitoring well shall be filled with a material comparable to the surrounding material. For example, a native soil/grass plug may be used in the upper three inches of a boring advanced in a grassy area. If for any reason the property owner requests a variance (i.e., do not grout the hole) the project manager will be contacted within 2 business days of the request and the request will be documented in the report of findings.

2. Construct permanent monitoring wells of two-inch diameter PVC casing with a ten-foot PVC screen in the area designated by the UST Project manager. The well(s) must be installed under the direct supervision of a South Carolina certified permanent well driller and constructed in compliance with the South Carolina Well Standards and Regulations, R.61-71.H. The wells will require proper filter pack, grout, well identification plate, locking well cap, well pad constructed at or above ground level, and well cover held in place with bolts or screws. Any monitoring well(s) completed in traffic areas should be flush-mounted. All other wells should be completed with a one-foot minimum stick-up casing. The screen of all shallow monitoring wells must be installed so that the water table is bracketed. The well must be properly developed. The development method shall be capable of removing enough formation cuttings, drilling fluids and additives to provide relatively sediment-free water samples that are typical of the aquifer. All development water must be containerized and disposed of as appropriate.

3. Describe the lithology of each soil sample collected during well installation and screen for organic vapor concentrations using properly calibrated instruments or test kits (e.g., immunoassay). Soil lithology and field-screening information should be documented on the well logs. For waste oil UST assessments, note any staining observed. When it is requested to analyze the soil samples please do so in accordance with **Section B4** of this document. When grain size/hydrometer analysis is requested determine the sand/silt and silt/clay fractions at 0.074 millimeters (#200 screen) and 0.004 millimeters, respectively. The report shall give the percentage of sand, silt, and clay.

4. Collect groundwater samples from monitoring or water supply wells when requested. Analyses should be conducted in accordance with **Section B4** of this document

5. If it is requested to conduct an aquifer slug test, record the change in the groundwater table vs. time data for each well. Evaluate the results of the slug test in accordance with commonly accepted methods (e.g., Bower and Rice, Hvorslev) and calculate seepage velocity. Enter data on the slug test form found at http://www.scdhec.gov/environment/lwm/forms/slugtest.pdf.

6. Store all soil, development and purge water generated during implementation in appropriate containers. Upon receipt of laboratory analytical results or 90 days whichever is sooner, properly dispose of the soil and wastewater in the appropriate manner. If the derived soil and wastewater is generated from a waste oil investigation, prior approval must be obtained from the Bureau of Land and Waste Management before offsite removal commences. Additionally, RCRA metals analyses to characterize the waste may be allowed if the permitted disposal facility requires such.

7. Perform survey to tie in the location and elevation of the newly installed monitoring well(s) to a minimum of two pre-existing monitoring wells. The survey should be scaled to reflect the existing site map. The accuracy of the subsequent survey will be of major importance. Determine monitoring well elevations from the top of casings.

8. Comprehensive Survey (if requested) should be conducted after completion of all field works (soil boring and monitoring well installation), a survey of the site shall be performed by a South Carolina Registered Surveyor. The survey should be accurate to 0.01 foot. The survey will cover an area measuring 500 ft by 500 ft and shall include, at a minimum, all of the following:
    a. the location of all manmade structures

b. all above ground and underground utilities
c. all potential receptors
d. all existing and/or former USTs and associated piping and dispensers
e. all monitoring wells associated with the release (elevation shall be measured to the top of casing of each monitoring well).

9. Repair damaged or missing items to previously installed monitoring wells as previously approved by the UST Management Division. This activity will include replacement of a cracked or broken well pad, replacement of the well vault, replacement of a missing well tag, replacement of the well cover, bolts, well caps, and locks. A description of all repairs will be included in the report.

10. High strength well pad replacement shall consist of a rebar enforced well pads that will be able to support heavy vehicles such as fully loaded semi's or concrete trucks. For an example truck stops, or sites that have heavy machinery driving over the monitoring wells.

11. **Abandon monitoring wells when necessary in compliance with the South Carolina Well Standards and Regulations, R.61-71.H.**

12. The final report (one [1] hard copy report and one [1] electronic copy) should be submitted and include the relevant elements as required in **Section A9** of the document.

Granulated Activated Carbon Unit Installation

Granulated Activated Carbon Units may be installed on water supply wells to filter out petroleum compounds until a permanent clean source of potable water is obtained.

1. The unit must filter Volatile Organic Compounds (to include Benzene, Toluene, Ethylbenzene, Xylenes, Methyl tert-butyl Ether, etc.), and Polynuclear Aromatic Hydrocarbons.

2. The unit must have a minimum carbon capacity of two cubic feet or 50 pounds.

3. New units must have a minimum five-year warranty on the control head unit and a lifetime warranty on the tank.

4. The unit must have an automatic counter to keep account of water usage or a counter must be installed in conjunction with the unit.

5. The unit must have a 48-hour capacitor that will reset the equipment for backwashing purposes in the event of electrical failure.

6. The equipment specifications must be validated by the Water Quality Association.

7. The contractor will provide a six-month warranty on all pipe, fittings, etc. used in the installation of all units.

8. The unit will be installed inside the existing well house (space permitting) or inside a locked housing. The housing must be durable and blend with the surroundings. Copies of the key to the lock must be provided to the owner of the well and to the Underground Storage Tank Management Division.

9. The contractor will install sample taps on the inlet and outlet lines of the unit to allow for sampling. The sample taps must be located inside the locked housing for the unit. The installation will include up to ten (10) feet of pipe (Schedule 40 PVC) and all necessary materials and fittings. When installing a GAC unit close to a house or basement extra measures must be taken to control the runoff from the unit.

10. All electrical wiring will be installed in compliance with applicable codes. The installation will include up to twenty (20) feet of wire and all necessary conduit, fittings, trenching (as required), materials and labor.

11. A schematic diagram of the unit (new or old) with the model number, serial number, site name, UST permit number, inlet and outlet ports will be required. This information must be submitted within one week of installation.

12. A sign in sheet must be in the housing unit to indicate carbon changes and other service. The information must include the time, date, type of service, and the full name(s) of the personnel conducting the service.

13. The contractor must provide all calculations, using analytical data provided by the Department, for determining COC breakthrough and the frequency at which the filter material must be changed.

14. All work under this contract must be done by a professional plumber certified in the State of South Carolina. Proof of certification must be provided with the QAPP Addendum

15. The final report (one [1] hard copy report and one [1] electronic copy) should be submitted and include the relevant elements as required in **Section A9** of the document.

Abandonment of Monitoring Wells

The UST Management Division may require the abandonment of monitoring wells that are no longer required or that have been damaged.

1. Abandon all monitoring wells at the assigned site under the direct supervision of a Class A, B, or C South Carolina-certified well driller. The wells must be filled from the termination depth to within six inches of the land surface with neat cement, bentonite-cement, or twenty (20) percent high solids sodium bentonite grout using forced injection or tremie pipe in accordance with the South Carolina Well Standards R.61-71. In paved areas, the vault will be filled with aggregate reinforced concrete or asphalt. In unpaved areas, the pad, vault, and cover will be removed and the space filled with soil to level with the surrounding land surface.

2. The final report (one [1] hard copy report and one [1] electronic copy) should be submitted and include the relevant elements as required in **Section A9** of the document.

B2 Sampling Methods

Notes:
Deployment of in-situ monitoring (field analysis for pH, conductivity, etc) is discussed under Groundwater Sampling (See Monitoring Well Purging) and used for monitoring the purging of the wells. Information on the specifics of QC, calibration etc is discussed in Section B4 of both this QAPP and the Contractor's QAPP Addendums.

The Procedures for the decontamination of sampling equipment is given in Appendix H. The individual Contractors are responsible for the disposal of the waste from such decontamination.

When problems occur in the field the Contractor is responsible for contacting the UST Project Manager within 24 hours. The problems are documented in field logs.

Soil Sampling

1. Introduction
The appropriate equipment and techniques must be used to conduct the investigation. This section discusses the sampling equipment available and collection methods, which have been shown to be technically, appropriate.

2. Equipment
Soil sampling equipment used for sampling trace contaminants should be constructed of inert materials. Ancillary equipment such as auger flights, post hole diggers, etc. may be constructed of other materials since this equipment does not come in contact with the samples.
Selection of equipment is usually based on the depth of the samples to be collected, but it is also controlled to a certain extent by the characteristics of the material. Manual techniques and equipment such as hand augers, are usually used for collecting surface or shallow, subsurface soil samples. Power operated equipment is usually associated with deep sampling but can also be used for shallow sampling when the auger hole begins to collapse or when the soil is so tight that manual auguring is not practical.

3. Sampling Methodology
This discussion of soil sampling methodology reflects both the equipment used (required/needed) to collect the sample, as well as how the sample is handled and processed after retrieval. Selection of equipment is primarily based on the depth of sampling, but it is also controlled, to a certain extent, by the characteristics of the material. Simple, manual techniques and equipment, such as hand augers, are usually selected for surface or shallow, subsurface soil sampling. As the depth of the sampling interval increases, some type of powered sampling equipment is usually needed to overcome torque induced by soil resistance and depth. The following is an overview of the various sample collection methods employed over three general depth classifications: surface, shallow subsurface, and deep subsurface. Any of the deep collection methods described may be used to collect samples from the shallower intervals.

A. Manual Collection Techniques and Equipment:

These methods are used primarily to collect surface and shallow subsurface soil samples. Surface soils are generally classified as soils between the ground surface and **12 inches** below ground surface. The shallow subsurface interval may be considered to extend from approximately 12 inches below ground surface to **24 inches or** to a site-specific depth at which sample collection using manual methods becomes impractical.

The sample must be obtained from an area that is not in contact with metal sampler surface.

1. Surface Soils

   a. Surface soils may be collected with a wide variety of equipment. Spoons, shovels, hand-augers, push tubes, and post-hole diggers (made of the appropriate material) may be used to collect surface soil samples. As discussed in the section on powered equipment, surface soil samples may also be collected in conjunction with the use of heavy equipment.

   b. Surface samples are removed from the ground and placed in pans, where mixing, as appropriate (Section 3.15.8), occurs prior to filling of sample containers. Section 11.4.1 contains specific procedures for handling samples for volatile organic compounds analysis. If a thick, matted root zone is encountered at or near the surface, it should be removed before the sample is collected.

2. Subsurface Soils

   a. Hand-augering is the most common manual method used to collect subsurface samples. Typically, auger-buckets with cutting heads are pushed and twisted into the ground and removed as the buckets are filled. The auger holes are advanced one bucket at a time.

   b. The practical depth of investigation using a hand-auger is related to the material being sampled. In sands, augering is usually easily accomplished, but the depth of investigation is controlled by the depth at which sands begin to cave. At this point, auger holes usually begin to collapse and cannot practically be advanced to lower depths, and further samples, if required, must be collected using some type of pushed or driven device.

   c. Hand-augering may also become difficult in tight clays or cemented sands. At depths approaching 20 feet, torquing of hand-auger extensions becomes so severe that in resistant materials, powered methods must be used if deeper samples are required. Some powered methods, discussed later, are not acceptable for actual sample collection, but are used solely to gain easier access to the required sample depth, where hand-augers or push tubes are generally used to collect the sample.

   d. When a vertical sampling interval has been established, one auger-bucket is used to advance the auger hole to the first desired sampling depth. If the sample at this location is to be a vertical composite of all intervals, the same bucket may be used to advance the hole, as well

as to collect subsequent samples in the same hole. However, if discrete grab samples are to be collected to characterize each depth, a new bucket must be placed on the end of the auger extension immediately prior to collecting the next sample. The top several inches of soil should be removed from the bucket to minimize the chances of cross-contamination of the sample from fall-in of material from the upper portions of the hole.

e. Another piece of soil sampling equipment commonly used to collect shallow subsurface soil samples is the Shelby or "push tube". This is a thin-walled tube, generally of stainless steel construction and having a beveled leading edge, which is twisted and pushed directly into the soil. This type of sampling device is particularly useful if an undisturbed sample is required. The sampling device is removed from the push-head, then the sample is extruded from the tube into the pan with a spoon or special extruder. Even though the push-head is equipped with a check valve to help retain samples, the Shelby tube will generally not retain loose and watery soils, particularly if collected at lower depths.

B. Powered Sampling Devices

Powered sampling devices and sampling aids may be used to acquire samples from any depth but are generally limited to depths of 20 feet or less. Among the common types of powered equipment used to collect or aid in the collection of subsurface soil samples are power augers; split-spoon samplers driven with a drill rig drive-weight assembly or hydraulically pushed using drill rig hydraulics; continuous split-spoon samplers; specialized hydraulic cone penetrometer rigs; and back-hoes. The use of each of these is described below.

1. Power Augers - Power augers are commonly used to aid in the collection of subsurface soil samples at depths where hand augering is impractical. This equipment is a sampling aid and not a sampling device, and 20 to 25 feet is the typical lower depth range. It is used to advance a hole to the required sampling depth, at which point a hand auger is usually used to collect the sample.

2. Drill Rigs - Drill rigs offer the capability of collecting soil samples from greater depths. For all practical purposes, the depth of investigation achievable by this method is controlled only by the depth of soil overlying bedrock, which may be in excess of 100 feet. When used in conjunction with drilling, split-spoon samplers are usually driven either inside a hollow-stem auger or inside an open borehole after rotary drilling equipment has been temporarily removed. The spoon is driven with a 140-pound hammer through a distance of up to 24 inches and removed. If geotechnical data are also required, the number of blows with the hammer for each six-inch interval should be recorded.

3. Back-Hoes - Back-hoes are often utilized in shallow subsurface soil sampling programs. Samples may either be collected directly from the back-hoe bucket or they may be collected from the trench wall if proper safety protocols are followed. Trenches offer the ability to collect samples from very specific intervals and allow visual correlation with vertically and horizontally adjacent material. Prior to collecting samples from trench walls, the wall surface must be dressed with a stainless steel shovel, spatula, knife, or spoon to remove the surface layer of soil that was smeared across the trench wall as the bucket passed. If back-hoe buckets are not cleaned according to the

procedures described in Appendix H, samples should be collected from material that has not been in contact with the bucket surface.

C. Special Techniques and Considerations

Collection of Soil Samples for Volatile Organic Compounds (VOC) Analysis: These samples should be collected in a manner that minimizes disturbance of the sample. For example, when sampling with a hand auger, the sample for VOC analysis may be collected directly from the auger bucket or immediately after an auger bucket is emptied into the pan. Samples for VOC analysis are not mixed. Low-level samples must be collected in accordance with 5035 following the certification requirements as issued by the SCDHEC Office of Environmental Laboratory Certification.

1. Dressing Soil Surfaces - Any time a vertical or near vertical surface, such as is achieved when shovels or back-hoes are used for subsurface sampling, is sampled, the surface should be dressed to remove smeared soil. This is necessary to minimize the effects of cross-contamination due to smearing of material from other levels.

2. Sample Mixing - It is extremely important that soil samples be mixed as thoroughly as possible to ensure that the sample is representative of the interval sampled. Soil samples should be mixed as follows:

   a. After collection, all sample handling should be minimized. Investigators should use extreme care to ensure that samples are not contaminated. If samples are placed in an ice chest, investigators should ensure that melted ice cannot cause the sample containers to become submerged, as this may result in sample cross-contamination. Plastic bags, such as Zip-Lock bags or similar plastic bags sealed with tape, should be used when small sample containers (e.g., bacterial samples) are placed in ice chests to prevent cross-contamination.

D. Specific Sampling Equipment Quality Assurance Techniques

All equipment used to collect soil samples should be cleaned as outlined in Appendix H and repaired, if necessary, before each use and before being stored at the conclusion of field studies. Equipment cleaning conducted in the field or field repairs should be thoroughly documented in field records.

E. Sample Handling and Shipment

All samples for volatiles analysis must be cooled, packed in appropriate containers, and shipped to the laboratory on ice, as described in Appendix F.

Groundwater Sampling

1. Introduction

Three data quality objectives have been identified for groundwater sampling including routine private well sampling, ambient water quality monitoring, and chemical investigation. Because the objectives have

different goals, these procedures were designed to address the minimally acceptable criteria for all three data quality objectives.

Groundwater samples are usually obtained from either temporarily or permanently installed groundwater monitoring wells. They can also be obtained anywhere groundwater is present, such as in a pit or a dug or drilled hole.

Groundwater sampling procedures can be sub-divided into two areas, purging and sampling; each of which has different goals and objectives. Regarding purging, temporary and permanent wells are addressed separately because of their differing characteristics. Depending on the nature and type of well to be sampled, purging the well may or may not be required.

2. Water Level Measurements

The measurement of the groundwater level in a well is frequently conducted in conjunction with groundwater sampling to determine the "free" water surface. Water level measurements should occur prior to purging and sampling. This potentiometric surface measurement can be used to establish groundwater flow direction and gradients. Total well depth and groundwater level measurements are needed to determine the volume of water in the well casing prior to purging the well for sampling purposes.

All groundwater level and total depth measurements should be made relative to an established reference point on the well casing and should be documented in the field records. To be useful for establishing the groundwater gradient, the reference point should be tied in with the NGVD (National Geodetic Vertical Datum) or a local datum.

Specific Groundwater Level Measuring Techniques
Measuring the depth to the free groundwater surface can be accomplished by the following methods (5). Method accuracies are noted for each of the specific methods described below.

- Electronic Water Level Indicators -- This instrument consists of a spool of dual conductor wire, a probe attached to the end, and an indicator. When the probe comes in contact with the water, the circuit is closed and a meter light and/or buzzer attached to the spool will signal the contact. Penlight or 9-volt batteries are normally used as a power source. Measurements must be made and recorded to the nearest 0.01 foot.

- Weighted Tape -- This method is similar to the "bell sounder" method, except that any suitable weight, not necessarily one designed to create an audible pop, can be used to suspend the tape. The weight should, ideally, be made of a relatively inert material that can be easily cleaned. Measurements must be made and recorded to the nearest 0.1 foot.

- Chalked Tape -- Chalk rubbed on a weighted steel tape will discolor or be removed when in contact with water. Distance to the water surface can be obtained by subtracting the wet chalked length from the total measured length. The tape should be withdrawn quickly from the well because water has a tendency to rise up the chalk due to capillary action. Measurements must

be made and recorded to the nearest 0.01 foot. This method is not recommended if samples are to be collected for analyses of organic or inorganic contaminants.

- Other Methods-- There are other types of water level indicators and recorders available. Accuracies for these methods vary and should be evaluated before selection. Any method that is not capable of providing measurements within 0.1 foot should not be used.

Total Well Depth Measurement Techniques
The weighted tape, or electronic water level indicators can be used to determine the total well depth. This is accomplished by lowering the tape or cable until the weighted end is resting on the bottom of the well. In deep wells with long water columns, it may be difficult to determine when the tape end is touching the bottom of the well. Care must be taken in these situations to ensure accurate measurements. All total well depth measurements must be made and recorded to the nearest 0.1 foot. Equipment must be decontaminated between measurements at sites.

Specific Quality Control Procedures
Devices used to measure groundwater levels should be calibrated against the Invar steel surveyor's chain. These devices must be calibrated to 0.01 foot per 10 feet length. Before each use, these devices must be prepared according to the manufacturer's instructions (if appropriate) and checked for obvious damage. These devices must be decontaminated according to the procedures specified in Appendix H prior to use at the next well. All calibration and maintenance data must be recorded in a log book. The ground surface elevation and top of casing elevation at the wells must be determined by standard engineering survey practices.

3. Monitoring Well Purging

Purging and Purge Adequacy:
Purging is the process of removing stagnant water from a monitoring well immediately prior to collecting the sample to ensure that the sample is representative of actual aquifer conditions. In certain situations dictated by the sampling technique or well-specific conditions, purging may not be necessary (see Diffusion Bag Samplers and No-Purge Sampling for Petroleum Releases descriptions below). In order to determine when a well has been adequately purged, field investigators must: 1) monitor the pH, specific conductance, temperature, and turbidity of the groundwater removed during purging; and/or 2) observe and record the volume of water removed. (For low-flow purging, other field parameters such as dissolved oxygen, may need to be monitored.) Purging must be conducted from the most upgradient well to the furthest downgradient well or from the least contaminated well to the most contaminated well if contamination is known. Prior to handling any purging or sampling equipment, clean disposable nitrile, powderless gloves must be worn.

The depth of water and depth of the well should be determined (if possible) before purging. Electrical water level indicators/well sounder, steel tape or chalk line can be used for this purpose. It is standard practice to mark the top of the well casing to provide a point of reference from which these measurements will be consistently made. Field investigators should look for these markings when taking these measurements. Extreme caution should be exercised during this procedure to prevent cross-contamination of the wells. This is a critical concern when samples for trace organic compounds or metals analyses are collected. At a

minimum, the well sounding device must be cleaned by washing in a laboratory detergent solution, followed by rinses with tap water and analyte-free water. After cleaning, it must be placed in a clean plastic bag or wrapped in foil.

Prior to initiating the purge, the amount of water standing in the water column (water inside the well riser and screen) must be determined. To do this, the diameter of the well must be determined and the water level and total depth of the well must be measured and recorded. The water level is subtracted from the total depth, providing the length of the water column. Once this information is obtained, the volume of water to be purged can be determined using one of several methods. One is the equation:

$$V = 0.04d^2h$$

Where: h = depth of water in feet, d = diameter of well in inches , V = volume of water in gallons

Alternatively, the volume may be determined using a casing volume per foot factor for the appropriate diameter well, similar to that in Table 7. The water level is subtracted from the total depth, providing the length of the water column. This length is multiplied by the factor in the Table 7, which corresponds to the appropriate well diameter, providing the amount of water, in gallons, contained in the well.

WELL CASING DIAMETER vs. VOLUME (GALS.)/FEET of WATER	
CASING SIZE IN INCHES	GALLONS of WATER/FT
1	0.047
2	0.163
3	0.367
4	0.653
5	1.02
6	1.469
7	1.999
8	2.611
9	3.305
10	4.08
11	4.934
12	5.875

Table 9 Well Casing Diameter Vs. Well Volume

With respect to volume, an adequate purge is normally achieved when three to five times the volume of standing water in the well has been removed. Field parameter measurement may or may not be required, depending on the goals of the investigation. Any alternate purging techniques that isolate the stagnant water above the screen may not require the minimum of three well volumes to be removed. The field notes must reflect the single well volume calculations, according to one of the above methods, and a reference to the appropriate multiplication of that volume, i.e., a minimum three well volumes, clearly identified as a purge volume goal. Field notes must indicate measured parameters for each well volume when applicable.

When monitoring to the groundwater chemistry, an adequate purge is achieved when the pH, specific conductance, and temperature of the groundwater have stabilized and the turbidity has either stabilized or is below 10 Nephelometric Turbidity Units (NTUs). Stabilization occurs when pH measurements remain constant within 0.1 Standard Unit (SU), or reproducible to within 0.1 (SU), specific conductance varies no more that 10 percent, and the temperature are all-constant for at least three consecutive readings. There are no criteria establishing how many sets of measurements are adequate for the determination of stability. If the calculated purge volume is small, the measurements must be taken frequently to provide a sufficient number of measurements to evaluate stability. If the purge volume is large, an initial set of measurements must be taken and then one set for each well volume of water removed.

If, after three well volumes have been removed, the chemical parameters have not stabilized according to the above criteria, additional well volumes should be removed. If the parameters have not stabilized within five volumes, it is at the discretion of the project leader whether or not to collect a sample or to continue purging. The conditions of sampling must be noted in the field log. If a well has not purged to dryness, samples must be collected immediately after purging the well.

In some situations, even with slow purge rates, a well may be pumped or bailed dry (evacuated). In these situations, dryness generally constitutes an adequate purge and the well should be sampled immediately following sufficient recovery (enough volume to allow filling of all sample containers). For wells that are purged to dryness, it is not necessary that the well be evacuated three times before it is sampled. The pH, specific conductance, temperature, and turbidity must be measured, during collection of the sample from the recovered volume as the measurements of record for the sampling event. Alternatively, a slow purge sampling technique may be appropriate in this situation.

Attempts must always be made to avoid purging wells to dryness. This may be accomplished, for example, by slowing the purge rate. If a well is pumped dry, it may result in the sample being comprised partially of water contained in the sand pack, which may not yield a representative sample. In addition, as water re-enters a well that is in an evacuated condition, it may cascade down the sand pack or the well screen, stripping volatile organic constituents that may be present. This practice may also introduce soil fines into the water column.

Equipment Available

Monitoring well purging is accomplished by using in-place plumbing and dedicated pumps or, by using portable pumps/equipment/bailers when dedicated systems are not present. The equipment may consist of a variety of pumps, including peristaltic, large and small diameter turbine (electric submersible), bladder, centrifugal, gear-driven positive displacement or other appropriate pumps. The use of any of these pumps is usually a function of the depth of the well being sampled and the amount of water that is to be removed during purging and/or site specific conditions or chemistry. Whenever the head difference between the sampling location and the water level is less than the limit of suction and the volume to be removed is reasonably small, a peristaltic pump may be used for purging. Appendix I contains the operating instructions for all pumps commonly used during groundwater investigations.

The constituents of concern at each site and the sampling objectives will determine the type of materials and equipment that can be used for purging and sample collection. Each site must be looked at individually in order to determine the proper equipment that can be used.

4. Purging Techniques

Purging with Pumps

When peristaltic pumps or centrifugal pumps are used, only the intake line is placed into the water column. The line placed into the water should be either standard-cleaned (see Appendix H) appropriate tubing for peristaltic pumps or standard-cleaned appropriate pipe attached to a hose for centrifugal pumps.

When submersible pumps (bladder, turbine, displacement, etc.) are used, the pump itself is lowered into the water column. The pump must be cleaned as specified in Appendix H. Purging rates using pumps are dependent upon the rate of groundwater recovery in the well and the data quality objectives of the site. Wells must be purged at a rate that does not cause recharge water to be excessively agitated. If a particular zone within the screen is being monitored, there should be no drawdown, as other zones above the one being monitored could interfere with data results.

Purging with Bailers

Standard-cleaned (Appendix H) bailers with new colorless nylon rope are slowly lowered into top of the water column, allowed to fill, and slowly removed. It is critical that bailers be slowly and gently lowered into the top of the water column, particularly during final stages of purging, to minimize turbidity and disturbance of volatile organic constituents.

For the Department's purposes, a dedicated bailer is one dedicated to a single well at a single site and is: 1) marked as to the well to which it is dedicated; 2) decontaminated with laboratory-grade, phosphate-free detergent and rinsed with deionized water after use; and 3) wrapped in clean aluminum foil or plastic until the next sampling event. The bailer can be left hanging in the well, although it should not be left hanging in the water column, and the rope must be changed prior to use at the next sampling event.
Non-dedicated bailers must be decontaminated according to Appendix H from before placing into another well. The use of these types of bailers may require the collection of an equipment (rinsate) blank at each sampling event.

Disposable bailers are bailers, which are used in only one well and discarded after the samples have been collected at that well. These bailers should not normally be used on more than one well at more than one sampling event, as they are not constructed for multiple uses.

Field Care of Purging Equipment

Regardless of which method is used for purging, new plastic sheeting must be placed on the ground surface around the well casing to prevent contamination of the pumps, hoses, ropes, etc., in the event they need to be placed on the ground during the purging or they accidentally come into contact with the ground surface. Sample bottles, pH meters, conductivity meters, and associated field equipment must be placed on plastic to prevent contact with the ground surface. The sampler must not step on the plastic sheeting. It is preferable that hoses used in purging that come into contact with the groundwater be kept on a spool wrapped in plastic or contained in plastic or aluminum foil both during transporting and during field use.

Purging Entire Water Column

The pump/hose assembly or bailer used in purging must be lowered into the top of the standing water column and not deep into the column. This is done so that the purging will "pull" water from the formation into the screened area of the well and up through the casing so that the entire static volume can be removed. If the pump is placed deep into the water column, the water above the pump may not be removed, and the subsequent samples, particularly if collected with a bailer, may not be representative of the groundwater.

It is recommended that no more than three to five feet of hose be lowered into the water column. If the recovery rate of the well is faster than the pumping rate, and no observable draw down occurs, the pump should be raised until the intake is within one foot of the top of the water column for the duration of purging. If the pump rate exceeds the recovery rate of the well, the pump will have to be lowered, as needed, to accommodate the draw down. After the pump is removed from the well, all wetted portions of the hose and the pump should be cleaned as outlined in Appendix H.

Careful consideration shall be given to purging of wells with free phase material. When free phase material is encountered, purging is generally not recommended. Alternate sampling techniques must be utilized.

Low Flow/Low Volume Purging Techniques/Procedures

When performing low-flow/low stress purging, the device with the lowest water removal rate and the least tendency to stress the well during purging should be selected for use. Alternatives to the low flow purging procedures exist and may be acceptable. The low flow/low volume purging is a procedure used to minimize purge water volumes. The pump intake is placed within the screened interval at the zone of sampling. Low flow rate purging is conducted after hydraulic conditions within the well have re-stabilized, usually within 24 to 48 hours of pump installation. The rate of pumping from a well should not exceed the rate that the aquifer can recharge the well (i.e., the water level in the well should remain relatively constant). This is monitored by measuring the top of the water column with a water level recorder or similar device while pumping. Dissolved oxygen must also be measured as an additional indicator parameter until it has stabilized to within 10% over three consecutive measurements. These techniques, however, are only acceptable under certain hydraulic conditions and are not considered standard procedures.

No Purge

For wells meeting specific criteria, collecting a groundwater sampling without purging the well may be approved by the directing Program. Prior Program approval for collecting groundwater samples using no-purge methods is required. Analytical results from groundwater samples collected using a no-purge method may not be accepted if the method was not approved by the directing Program prior to sample collection.

Purging Techniques - Wells With In-Place Plumbing:

Wells with in-place plumbing are commonly found at municipal water treatment plants, industrial water supplies, private residences, etc. Many permanent monitoring wells at active facilities are also equipped with dedicated, in-place pumps. The objective of purging wells with in-place pumps is the same as with monitoring wells without in-place pumps, i.e., to ultimately collect a sample representative of the groundwater.

If the pump runs more or less continuously, no purge (other than opening a valve and allowing it to flush for a few minutes) is necessary. If a storage tank is present, a spigot, valve or other sampling point should be located between the pump and the storage tank. If not, the valve closest to the tank should be used. If the pump runs intermittently, it is necessary to estimate the volume to be purged, including storage/pressure tanks that are located prior to the sampling location. The pump must then be run continuously until the required volume has been purged. If construction characteristics are not known, best judgment should be used in establishing how long to run the pump prior to collecting the sample. Measurements of pH, specific conductance, temperature, and turbidity may be made and recorded at intervals during purging and sampling.

Purging Techniques - Temporary Monitoring Wells:
Temporary groundwater monitoring wells differ from permanent wells because temporary wells are installed in the groundwater for immediate sample acquisition. Wells of this type may include a standard well screen and riser placed in boreholes created by hand auguring, power auguring, or by drilling. They may also consist of a rigid rod and screen that is pushed, driven, or hammered into place to the desired sampling interval.

As such, the efforts to remove several volumes of water to replace stagnant water, do not necessarily apply in these situations. It is important to note, however, that the longer a temporary well is in place and not sampled, the more appropriate it may be to apply standard permanent monitoring well purging criteria.
In cases where the temporary well is to be sampled immediately after installation, purging is conducted primarily to mitigate the impacts of installation. In most cases, temporary well installation procedures disturb the existing aquifer conditions, resulting primarily in increased turbidity. Therefore, the goal of purging is to reduce the turbidity and remove the volume of water in the area directly impacted by the installation procedure. Low turbidity samples in these types of wells can be achieved by the use of low-flow purging and sampling techniques.

Low Flow Sampling of Temporary Monitoring Wells
In purging situations where the elevation of the top of the water column is no greater than approximately 25 feet below the pump head elevation, a peristaltic pump may be used to purge temporary wells. Enough tubing should be deployed to reach the bottom of the temporary well screen. At the onset of purging, the tubing should be slowly lowered to the bottom of the screen to remove any formation material that may have entered the well screen during installation. This is critical to ensure rapid achievement of low turbidity conditions. After the formation material is removed from the bottom of the screen, the tubing should be slowly raised through the water column to near the top of the column. The tubing must remain at this level to determine if the pump is lowering the water level in the well. If there is no drawdown, the tubing must be secured at the surface to maintain this pumping level.

If draw down is observed on initiation of pumping and a variable speed peristaltic pump is being used, the pump speed must be reduced to stabilize the draw down in the well, if possible. If the draw down stabilizes, the intake point and the pumping rate must be maintained. Sustained pumping at a low rate will usually result in a relatively clear, low turbidity sample. In situations where the draw down cannot be stabilized, the intake point must be continuously lowered to match the water column.

With many of the direct push sampling techniques, no purging is conducted. The sampling device is simply pushed to the desired depth and opened and the sample is collected and retrieved.

Purge Water Management:
Purge water is either discarded approximately 20 feet downgradient of the well or contained and managed as investigation derived waste, depending on contaminant levels in the water to be determined on a site specific basis.

5. Sampling

Sampling is the process of obtaining, containerizing, and preserving the groundwater sample. Samples must be collected immediately after the purging process is completed. In general, the order of well sampling should occur from the least to the most impacted well, if known.

Sampling Techniques - Wells With In-Place Plumbing:
Samples must be collected following purging from a valve or cold water tap as near to the well as possible, preferably prior to any storage/pressure tanks that might be present. Hoses should be removed prior to sample collection. The flow should be reduced to a low level to minimize sample disturbance, particularly with respect to volatile organic constituents. Samples should be collected directly into the appropriate containers (see Appendix F).

Techniques - Wells Without Plumbing:
Immediately following purging, samples must be collected using the techniques which are described below. Samples collected for trace organic compounds must be collected at a rate slow enough to eliminate generation of excessive bubbles and aeration of the water as it enters the bottle.

Peristaltic Pump/Vacuum Jug
The peristaltic pump/vacuum jug can be used for sample collection because it allows for sample collection without the sample coming in contact with the pump tubing. This is accomplished by placing a transfer cap assembly onto the neck of a standard cleaned 4-liter (1 gallon) glass container. Tubing (3 inch OD) connects the container to both the pump and the sample source. The pump creates a vacuum in the container, thereby drawing the sample into the container without it coming into contact with the pump tubing.

Samples for volatile organic compound analysis must be collected using a bailer or by filling the tube, and allowing it to drain into the sample vials. The tubing can be momentarily attached to the pump to fill the tube with water. After the initial water is discharged through the pump head, the tubing is quickly removed from the pump and a gloved thumb placed on the tubing to stop the water from draining out. The tubing is then removed from the well and the water allowed to drain into the sample vials. Alternatively, the tubing can be lowered into the well to the desired depth and a gloved thumb placed over the end of the tubing. This method will capture the water contained in the tubing. It can then be removed from the well and the water collected by draining the contents of the tubing into the sample vials. Under no circumstances must the sample for volatile organic compound (VOC) analysis be collected from the content of any other previously filled container. Equipment must be cleaned using the procedures described in Appendix H.

Bladder Pumps

After purging has been accomplished with a bladder pump, the sample may be obtained directly from the pump discharge. The discharge rate of the pump must be minimized during sampling to diminish sampling disturbance. This is especially important for the collection of VOC and metals samples.

Bailers

When bailing, new plastic sheeting must be placed on the ground around each well to provide a clean working area. The colorless nylon rope must be attached to the bailer. The bailer must be gently immersed in the top of the water column until just filled. At this point, the bailer must be carefully removed and the contents emptied into the appropriate sample containers.

Diffusion Sampling

Diffusion sampling is a method of groundwater sampling for certain volatile organic compounds. No purging is required for this method of sampling. A water diffusion sampler consists of a diffusible bag, like polyethylene, filled with deionized water and sealed. Commercially available samplers should be used when possible. Proper QA/QC on the quality of the deionized water needs to be obtained in order to adequately interpret sample results. The bag must be positioned within the screened interval of the well by hanging the bag from a nylon or stainless steel cord attached to the top of the well. The diffusion bag sampler needs to remain in the well until concentrations within the bag reach equilibrium with those in the surrounding groundwater. Typically after a period of two weeks the bag can be withdrawn from the well, emptied into a standard sampling container (e.g., a VOA vial), sealed and shipped for analysis.

Diffusion samplers may also be used to collect samples from the groundwater/surface water interface or transition zone. The sampler is emplaced (buried) within the transition zone and allowed to equilibrate for a period of two weeks. The sampler is then removed and water is withdrawn from the bag for analysis.

Direct Push Sampling

Direct push sampling may be used when an investigation centers around constituents that are not affected by sample turbidity. Direct push sampling is not generally recommended for metals or PCBs. The direct push unit allows a microscreen to be opened at various intervals to the formation of interest. Methods of water sample collection using direct push technology employ either a vacuum pump or an inert gas lift system. The inert gas lift system reduces the chance for volatilization of constituents from the sample. Sampling occurs from the chamber within the screen (gas lift) or from tubing attached to the screen (vacuum lift). All direct push well screens must be cleaned in accordance with the decontamination procedures presented in Appendix H between sample locations and before usage. For vacuum pump sampling, new tubing must be used at each sample location.

No-Purge Sampling for Petroleum Releases

For wells meeting specific criteria, collecting a groundwater sampling using standard sample collection methods without purging the well may be approved by the directing Program. Prior Departmental Program approval for collecting groundwater samples using no-purge methods is required. Analytical results from groundwater samples collected using a no-purge method may not be accepted as reliable by the Department if the method was not approved by the directing Program prior to sample collection.

Wells that may be approved for no-purge sampling must meet the following criteria.

- The water level in the well is within the screened interval;

- The primary chemicals of concern are petroleum chemicals;
- There is no non-aqueous phase liquid present; and,
- The well has been previously sampled within the past 12 months.

Petroleum chemicals are predominantly volatile organic compounds. Therefore, sample collection shall be in accordance with methods described above for bailers, bladder pumps, or diffusion sampling rather than methods that apply a vacuum to the sample. Prior to sample collection, the water level must be gauged and recorded to ensure that it is within the screened interval and no free-phase product exists. Indicator parameters to be measured in the field should be measured after sample collection.

Sample Preservation
Immediately after collection, all samples requiring preservation must be preserved with the appropriate preservative, unless the laboratory has already placed the preservative in the sample bottles. Consult Appendix F for the correct preservative for the particular analytes of interest. All samples preserved using a pH adjustment (except VOCs) must be checked, using pH strips, to ensure that they were adequately preserved. This is done by pouring a small volume of sample over the strip. Do not place the strip in the sample. Those samples requiring cooling must be placed on ice immediately after collection.

6. Special Sample Collection Procedures

Volatile Organic Compounds and Metals
In most cases, samples collected for organic compounds and metals must be collected prior to other samples, with VOC samples being collected first. The VOC samples must be collected so that no air bubbles remain in the sample container. These samples must be collected by slowly pouring the sample contents into the vial until a convex meniscus is seen on the surface of the vial. A Teflon lined septum cap must carefully be placed on the vial until finger tight. The sample bottle should then be inverted to verify that no air bubbles have been trapped inside.

Filtering
As a general rule, groundwater samples should not be filtered. However, filtration may be needed to correct for chronically turbid wells. Filtered samples must not be collected from usable water supply wells. Filtering is also not recommended when the sample turbidity appears to be chemically-induced or colloidal.
When samples are filtered, such as under conditions of excessive turbidity, both filtered and unfiltered samples must be submitted for analyses. Samples for organic compounds analysis must not be filtered. It is recommended that efforts be undertaken to minimize any persistent sample turbidity problems. These efforts may consist of the following:

- Implementation of low flow/low stress purging and sampling techniques.
- Redevelopment of permanent ground water monitoring wells.

Specific Sampling Equipment Quality Assurance Techniques:

All equipment used to collect groundwater samples shall be cleaned as outlined in Appendix B and repaired, if necessary, before being stored at the conclusion of field studies. Cleaning procedures utilized in the field (Appendix H), or field repairs shall be thoroughly documented in field records.

Field Documentation:
During groundwater sample collection, it is important to record a variety of groundwater related including water level well volume, pumping rates, turbidity and perhaps well logs. This information must be documented in the field records. Well volume determinations are described in the Groundwater Sampling Section C. If indicator parameters such as pH, conductivity, and temperature are used during well purging and sampling, the data must be recorded in the field notebook, along with the time of the measurement and the associated well volume. Indicator parameter measurements (pH, conductivity, etc.), including time measurements/volume of water pumped, must be recorded in the field notebook.

Miscellaneous information that must be included in the field notes include, but is not limited to, the weather conditions, type of equipment used for purging and sampling, time of sample collection, and any problems with the monitoring well casing, pad, lock and other problems at the location of the well such as overgrown vegetation.

B3 Sample Handling & Custody

See Appendix F for Preservation and Holding Times for laboratory analyses. All field analyses must be done within 15 minutes of sample collection.

Chain of Custody Forms must contain, at minimum, the following information:

1. Collection date and time for each sample. If the sample is a composite sample and is collected by an automatic sampler, the starting and ending dates and times of the sampling period must be documented. If the composite sample was collected manually, the date, time, and collector of each portion must be documented also.
2. Printed name and Signature of sample collector(s).
3. Unique sample identification number (see below). One sample should be entered on each line or column and a sample should not be split among multiple lines or columns.
4. Sampling location and description (if necessary).
5. Sample type - grab or composite. Although grab and composite samples might be collected from the same location at the same time, they differ in composition and must be listed separately and must have unique identification numbers.
6. Analyses required, specified for each sample.
7. Preservatives used (H2SO4, NaOH, ice, etc.) for each sample. This includes any dechlorination agents or other chemicals added to the bottle prior to sampling.
8. Program area – This must be listed as UST Management Division.
9. Sample matrix – drinking water, groundwater, waste, soil, free product, etc.
10. Transfer signatures with dates and times for both relinquishment and laboratory receipt (the laboratory should indicate courier, FEDEX, UPS, etc. in the "relinquished to" space if applicable).

11. Receipts maintained when shipped by common carrier (FEDEX, UPS, etc.). These receipts should be attached to the pertinent chain-of-custody records.
12. The number and type of container used.

Monitoring wells should be designated with the 5-digit permit number and the well id (e.g. 12345-MW1). Water supply wells should be designated with the 5-digit permit number and the well Id (e.g. 12345-WSW1). Surface water sampling locations should be designated with the 5-digit permit number and the location ID (e.g. 12345-SW1). Soil borings should be designated with the 5-digit permit number and the location ID (e.g. 12345-SB1).

Samples shipped to laboratories must be received below 6°C but above 0°C (unless analytical method requires lower temperature). Temperature blanks may be used. Their purpose is to determine the internal temperature of the shipping container upon arrival at the lab. Blanks should consist of one or more small containers (40-250 ml) of water placed in the ice chest with samples and marked as a "Temperature Blank". Alternative methods for measuring temperature, such as an infrared thermometer, may also be used. The temperature at receipt (arrival) must be documented on the chain of custody form. Temperature blank or cooler environment must be documented; sample container should not be used.

In the QAPP Addendum the Contractor must give specific information on how the samples will be shipped to the laboratory, indicating how sample or information handling and custody information should be documented, such as in field notebooks and forms, and identifying the individual responsible for this. (See Appendix_B)

B4 Analytical Methods

Analytical procedures for field measurable physical and chemical characteristics as well as performance criteria are found in Appendix E.

The contractor will identify which methods the lab will be using in the QAPP Addendum.

Maximum Turnaround time is 3 weeks.

The QAPP Addendums will include sample disposal information and corrective actions for analytical failures. However, when analytical failures occur, the UST Project Manager must be contacted within 24 hours.

If Ferrous Iron or the Kerr method (non-standard methods) is employed, the Addendum will include an attached SOP.

B5 Quality Control Requirements

Because of the role laboratory data plays in determining regulatory courses of action and decision-making, a QA/QC program to ensure data reliability and quality data is essential. Sample collection, preservation, handling and storage, as well as each step in the analytical method, are considered as they relate to

precision, accuracy and the stated data quality needs for a given project. Please refer to Appendix E for the field and laboratory quality control requirements.

In the case of QC failure, the sample must be reanalyzed. In the event that additional sample in not available or cannot be recollected, the contractor must notify the UST Project Manager within 24 hours.

Trip blanks will be submitted for each sampling event. The blanks are prepared by the analyzing laboratory using distilled or de-ionized water that is analyte-free and which is shipped with the other sample bottles to the field and then returned to the analyzing laboratory with the samples for analysis. The trip blanks are not separated from other samples. They must be packaged with the environmental samples collected during the sampling event. They are collected to check sample contamination from on-site conditions. One trip blank will be included in each sample cooler. The trip blank must be analyzed for VOCs.

Field blanks will be collected for each site survey. Field blanks for VOCs and metals must be collected using the same sample collection procedures. Field blanks are used to assess potential contamination of samples from the site environment.

Field duplicates will be collected. One duplicate will be collected for every batch of twenty samples or less. Field duplicate samples are taken within five minutes of collecting the original samples and include all the sub-samples. A new sample is collected from the sampling point for the field duplicate. The samples are shipped back with the other sample bottles for analysis. The precision resulting from field duplicates is a function of the variance of sample composition, the variance of the sampling technique, and the variance of laboratory sample. One duplicate sample will be collected for each twenty samples, or subset thereof.

Laboratory QA/QC information for all sample sets will be required and reviewed by staff. This should include matrix spikes and duplicates in the analytical batch that are non-DHEC project samples. All laboratories must also meet all quality control procedures outlined in Test Methods for Evaluating Solid Waste, Physical/Chemical Methods, SW-846, 3rd Edition, Updates I–IV. Corrective action procedures used by the laboratories are discussed in each laboratory's QA Plan. Precision and accuracy will vary with the analytical method and laboratory procedures. The analyzing laboratory must make precision and accuracy statements available upon request. The analyzing laboratory must prepare a quality assurance report evaluating the quality control measurements listed above.

Site rehabilitation contractors who perform field analytical methods (including, but not limited to pH, specific conductance, dissolved oxygen) must obtain certification to perform those methods through the SCDHEC's Office of Environmental Laboratory Certification program. Site rehabilitation contractors will be required to submit Standard Operating Procedures and Quality Assurance/Quality Control plans addressing any field analytical methods they perform.

An analytical laboratory certified for required parameters through the SCDHEC's Office of Environmental Laboratory Certification program must perform all analytical methods.

Formulas for calculating QC statistics are in Section A7. If the Contractor is using other procedures, then these must be given in the QAPP Addendum.

B6 Instrument/Equipment Testing, Inspection, and Maintenance

Laboratory and field instrumentation will be tested daily prior to use. Specific information about what equipment must be tested, inspected, maintained, spare parts and their location will be required in any addendum to the QAPP provided by the contractors. Corrective action information is also required in the QAPP Addendums.

All equipment shall be routinely inspected and maintained according to the service and instruction manuals. Maintenance documentation for the equipment must be kept on file and made available upon request. All instruments and equipment will be tested, inspected, and maintained according to the manufacturer's guidelines and recommendations. Project staff that have been properly trained in these procedures will operate the instruments.

All disposable sampling equipment is used one time, then properly containerized and disposed of. Reusable sampling and investigative equipment is decontaminated prior to commencement of an investigation or sampling event and is decontaminated between uses and at the end of the event.

Field decontamination methods are detailed in Appendix H.

B7 Instrument/Equipment Calibration and Frequency

All field equipment needed for sampling, as well as safety equipment, will be calibrated prior to and during continued use to assure that all measurements are as accurate as possible. Personnel will follow the manufacturer's instructions to determine if the instruments are functioning within their established operation ranges. The calibration will be recorded in the field logbook as well as the field data sheet. The field analyst will specify the identification of the field instrument by serial number in the field logbook as well as the field data sheet so that the calibrations are traceable to a specific piece of equipment.

To be acceptable, a field test must be bracketed between acceptable calibration results.

1. The first check may be an initial calibration, but the second check must be a continuing verification check.

2. Each field instrument must be calibrated prior to use.

3. Verify the calibration at the beginning of each work shift, during use, and at the end of the use.

4. All initial calibration and verification checks must meet the acceptance criteria in the table below.

5. If an initial calibration or verification check fails to meet the acceptance criteria, immediately recalibrate the instrument or remove it from service.

6. If a verification check fails to meet the acceptance criteria and it is not possible to reanalyze the samples, the following actions must be taken:

a. Report all results between the last acceptable verification check and the failed check as 'estimated' (qualified with a "J");
b. Include a narrative of the problem; and
c. Shorten the time period or frequency between verification checks or repair/replace the instrument.

7. For continuous monitoring equipment, all acceptable field data must be bracketed by acceptable checks or the data must be qualified.

Field Parameter	Acceptance Criteria
Temperature	±1°C against an NIST-traceable thermometer
Specific Conductance	10% of each standard used
PH	±0.2 pH units of stated buffer value
Turbidity	10% of each standard used

Table 10 Field Parameter Acceptance Criteria

Any sampling equipment or field measurement instrument determined to be malfunctioning in any way must be repaired and recalibrated or removed from service. This corrective action must be documented in the records.

Laboratory equipment calibration protocols are addressed within SOPs that are reviewed by the Office of Environmental Laboratory Certification. Laboratory equipment will have a calibration log book for each piece of instrument that will be maintained by the analyst.

B8 Inspection/Acceptance of Supplies and Consumables

The following applies to UST Management Division staff:
The necessary supplies for field sampling include polyethylene bailers, nitrile gloves, calibration standards for pH, conductivity, and turbidity, sterile glass or plastic sample containers with labels, insulated containers for transporting samples, ice, water quality sampling forms, and sampling SOPs/checklists. The UST Management Division's Senior Field Technician and Laboratory Contract Manager are responsible for ensuring that necessary field and sampling supplies are available as needed.

The analyzing laboratory shall have written procedures for inspecting and accepting supplies and consumables. The analyzing laboratory will provide documentation of the integrity of the sample containers prior to receipt by the UST Management Division. Bailers shall have written quality assurance certification provided Acceptability requirements for non-analytical supplies and consumables are provided in the table below.

Supplies and consumables are inspected upon receipt for breakage and intact packaging. All supplies are re-inspected prior to usage in the field. To prevent tampering, supplies and consumables are stored in the supply storage room that can be locked when staff is not in attendance.

The following applies to the contractors:

Contractors will provide a list in the QAPP addendum concerning items for field sampling and the analyzing laboratory shall have written procedures for inspecting and accepting supplies and consumables. The analyzing laboratory will provide documentation of the integrity of the sample containers. Supplies and consumable for field and laboratory analysis are inspected as part of an on-site laboratory certification audit every three years. In the interim, all field and laboratory staff are required to maintain the same level of acceptability for all analytical consumables as required by the South Carolina Office of Environmental Laboratory Certification and EPA.

Item	Vendor	Acceptance criteria	Handling/Storage Conditions	Person responsible for inspection and tracking.
Nitrile gloves	All	No holes; must be nitrile NOT latex	1 box of appropriate size per vehicle; also used in lab	UST Staff, Contractor, or laboratory staff
Bailers	All	Polyethylene	1 box of appropriate size per vehicle	UST Staff or Contractor
Calibration standards for pH, conductivity, and turbidity	All	Must be within expiration data and acceptable for the allowable method.	Office prep area-room temperature	UST Staff or Contractor
Insulated containers	All	Used only for sample transportation, in good condition, no damage that would compromise sample integrity	Office prep area-room temperature	UST Staff, Contractor, or laboratory staff

Table 11 List of Consumables and Acceptance Criteria

B9 Non-direct Measurements

The UST Management Division utilizes data from non-measurement sources to populate risk or groundwater fate and transport models when values derived from direct measurement do not exist or cannot be readily obtained. These data are gathered from sources such as EPA standards and from published scientific papers. These data sources are known to be acceptable and are used throughout the country. As these data are not site-specific, values used are conservative in order to produce results that are protective of human health and the environment. Site-specific values will be used whenever possible.

The contractor will be required to list the data source and provide a reason for use in the QAPP addendum.

B10 Data Management

Note: The Contractor will be responsible for providing the Project Specific data management scheme and the specifics of data archival for both the contractor and the lab that is used.

1. Field Data

All field data and observations will be recorded and maintained by the contractor. After field data has been reviewed for accuracy, it will be produced in tabular form for inclusion in the final report.

Any problems encountered through direct observation or through review of field data will be identified to the DHEC Project Manager and documented in the final report. The report shall include documentation of any corrective measures taken and discussion of any potential effect on field data objectives.

2. Laboratory Data

Prior to release of the analytical report, the sample data will be reviewed by the laboratory for accuracy, precision, and holding times. This process shall include a review of the data by the primary analyst and than a final review by the laboratory's Quality Control Officer. The data will be reported on a dry weight basis and take into account any required dilutions. The analytical data packages will include the following information: sample ID, analyst's initials, sample results, method blank results, laboratory control sample recovery, matrix spike/matrix spike duplicate recoveries and relative percent differences, surrogate recoveries, date and time of sample collection, date and time of sample receipt, date and time of sample preparation, date and time of sample analysis, dilution factors, pH of water samples, sample temperature at time of receipt, analytical and preparation methods used, method detection and quantitation limits, problems and corrective action, and applicable certifications. (See also Section A9).

The laboratory's review of the data will be based on the following criteria:
All analytical holding times are met,
Use of specified analytical procedures,
Use of properly calibrated and operating instruments,
Successful analysis of the appropriate QC samples.

Once samples have been collected and analyzed, the project manager will assess the data for completeness and data entry errors. Any discrepancies will be verified with the hard copy, the sampler, and the analytical laboratory. The nature of the data and the subsequent analyses will be consistent to permit the comparison of data in one set to others.

3. National Data

The UST Management Division provides data to EPA Region 4 on a quarterly basis using the EPA Region 4 Underground Storage Tank Section Quarterly Activities Report.

4. Data Storage

Hard copies of field and laboratory data will be stored in accordance with the UST Management Division's Records Retention Schedule. (See Appendix J) Worst-case results will be entered into the Environmental Facility Information System (EFIS) database. The UST Management Division is scanning all received documents and storing electronically. The Electronic data will be stored for the life of the system.

The contractor and laboratories will be required to maintain a copy of all information submitted to the UST Management Division for a minimum of five years, unless otherwise specified.

Currently the UST Management Division is accepting data in hardcopy format from the contractor. In the near future, the UST Management Division will accept data in electronic format to be submitted for electronic validation.

The UST Management Division is scanning all received documents and storing electronically.

Refer to Section 9 of the SCDHEC EQC and OCRM Quality Management Plan, 2008 (See Appendix_L) for details describing procedures for demonstrating the acceptability of the hardware and software configurations for the UST Management Division. Contractor procedures should be comparable especially in that their procedures must follow Federal and State Mandates. In addition, all software should be demonstrated to be acceptable for UST projects PRIOR to use.

SECTION C ASSESSMENT AND OVERSIGHT

C1 Assessment and Response Actions

Types of Assessments

- **Field Sampling Technical System Audit (TSA)-** A thorough on-site audit during which sampling design, equipment, instrumentation, supplies, personnel, training, sampling procedures, chain of custody, sample handling and tracking, data reporting, data handling and management, data tracking and control, and data review procedures are examined for conformance with the QAPP. At least one Field Sampling TSA should be performed at the start of field sampling activities.

- **On-Site Analytical TSA-** An on-site audit of analytical procedures during which the facility, equipment instrumentation, supplies, personnel, training, analytical methods and procedures, laboratory procedures, sample handling and tracking, data reporting, data handling and management, data tracking and control, and data review procedures are checked for conformance with the QAPP. This can be performed at any time during the project. The SCDHEC Office of Environmental Laboratory Certification requires at least one on-site analytical TSA every three years for certification purposes. This on-site audit includes a data audit as well. Auditors from SCDHEC Office of Environmental Laboratory Certification are drinking water laboratory certification officers certified by EPA Cincinnati. The job requirements for an auditor include a science degree and extensive laboratory experience. At the end of the on-site audits, a closeout meeting is held with laboratory personnel and management to list the deficiencies found during the on-site inspection. Within 6 weeks an audit report is sent to the lab manager detailing what seen during actual audit but also deficiencies found in records and data. The laboratory has one month to report corrective action they are taking to correct the deficiencies. Responses to audits go directly Carol Smith, the certifying authority for the laboratory certification program at SCDHEC.

- **Off-site Laboratory TSA -** An off-site audit of a subcontracted lab--during which the training records, analytical records and procedures, laboratory procedures, sample handling and tracking, data reporting, data handling and management, data tracking and control, and data review procedures are checked for conformance with the QAPP. The need for this is determined by UST

Management Division Personnel and the Contractor and may be used when the primary lab has subcontracted part of the project work. This can be performed at any time during the project. In addition, the laboratory certification status must be determined prior to any samples being analyzed. For a very large project, at least one Off-Site Laboratory TSA should be performed prior to the start of sampling activities so that effective correction action measures can be implemented to mitigate the extent and impact of identified non-conformances.

- **Split Sampling and Analysis Audit -** A comparison study to assess laboratory precision and accuracy. The sampler collects one field sample and then physically splits it into two representative sample aliquots. For split samples to be truly comparable the splits must have identical sample handling and pretreatment, the laboratory(ies) must use the same analytical methods, and the QC items for the analytical runs must be the same. Split samples quantitatively assess the measurement error introduced by the organization's sample shipment and analysis system and must be accompanied by a PT Sample to establish the acceptance criteria. Split sample comparability criteria must be generated prior to sample collection and documented in the QAPP.

- **Proficiency Test (PT) Sample Tracking and Analysis-** Providers of testing materials must be acceptable to the Office of Environmental Laboratory Certification.

Assessment E or I	Frequency	Organization Responsible	Individual Receives Report & Notification of Deficiencies	Time-frame of Notification	Individual that Implements Corrective Actions?	Corrective Action Effectiveness Documented where?	Individuals Receiving Corrective Action Response
PT /E	One per year	PT Provider acceptable to SCDHEC Office of Environmental Laboratory Certification	**Field:** Field Manager or Contractor **Lab:** Laboratory QC Officer and/or Lab Director **SCDHEC**: Office of Environmental Laboratory Certification	Approx. 3 weeks after study ends	**Field:** Field Manager or Contractor **Lab:** Laboratory QC Officer	Memo to Lab QA Officer or Contractor	Lab QA Officer or Contractor and possibly the Lab Director
TSA/E	Per SCDHEC Office of Environmental Laboratory Certification's policy.	SCDHEC	Lab QA Officer and Lab Director	Per SCDHEC Office of Environmental Laboratory Certification's policy.	Lab Director	Response to Audit	Director, SCDHEC Office of Environmental Laboratory Certification
Onsite Field Data	Daily	Contractor	UST Management Division personnel	24 hours	Contactor	Final report to submitted to SCDHEC	UST Management Division personnel
Onsite TSA/I For Analytical Lab	As determined for the specific project by UST Staff.	Lab QA Office	Lab Manager	2 weeks	Lab Manager	Response to Audit	Lab QA Officer
Off Site Laboratory TSA/I	As determined for the specific project by UST Staff . Primarily for subcontracted Labs to determine compliance to the QAPP.	Contractor	Laboratory Director and SCDHEC UST Project Manager	1 week	Lab Director	Response to Off-Site TSA	Contractor and SCDHEC UST Project Manager
Split Sampling	As determined for the specific project by the UST Project Manager	Contractor	Lab Director and UST Management Division Project Manager	4 weeks after sample collection (turn around time for the Labs is 3 weeks)	Contractor with the Lab Director	Email to UST	UST Project Manager

C2 Reports to Management

The UST Management Division will submit the QAPP to the EPA for approval and when changes are made to the QAPP. The SCDHEC UST Program is an approved program by EPA, as such specific site reports are not submitted to EPA.

The contractor will provide the UST Project Manager with a Project Status Report (see Appendix M) on a weekly basis via e-mail. The Status Report will include the UST Permit number, facility name, date of update, current status, any issues that have arisen, corrective action measures taken to correct deficiencies, any changes to date final report is to be submitted. Due to the nature of the work conducted by the contractors and the UST Management Division, the contractor will notify the UST Management Division project manager within 24 hours via phone or e-mail concerning any quality assurance problems. This is important because the project manager and the contractor will determine appropriate corrective action measures to be taken. The environmental contractors and analytical laboratories shall be responsible for reporting and correcting all sample handling procedures that deviate from the approved Data Quality Objectives and/or other project specific requirements. The UST Project Manager will be informed of these issues via the weekly Project Status Report. The UST Project Manager will be notified within 24 hours via phone or e-mail of any issue that cannot be satisfactorily resolved between the contractor and analytical laboratory to determine the appropriate corrective action measures to be taken. A discussion of the problem(s) encountered, including quality assurance problem, the actions taken, and the results will be included in the final report submitted to the UST Management Division. A compilation of the weekly status reports will be included in the final report submitted to the UST Management Division

The UST Project Manager has the discretion of conducting onsite visits to assess the performance of the contractor in accordance with the QAPP. The results will include the finding of the visit, any discrepancies, corrective action measure taken, and results of any follow-up visits. The results of the onsite visit will be documented and stored with the project file.

The UST Project Manager assesses data submitted by the contractor, in cases were errors compromise the integrity of the project, UST Program management is notified.

SECTION D DATA VALIDATION AND USABILITY

D1 Data Review, Verification and Validation

To ensure that data generated are of appropriate quality, all data will be verified and validated. These are systematic procedures for reviewing a body of data against a set of established criteria to provide a specified level of assurance of its validity prior to its intended use. The techniques used must be applied to the body of the data in a systematic and uniform manner. The process of data validation must be close to the origin of the data, independent of data production, and objective in its approach. All data, as applicable, will be validated in accordance with EPA guidance, per Data Quality Objectives Process. Any deviations will be documented and provided with the final report.

If verification or validation indicates that samples have been collected and/or analyzed out of compliance with the QAPP (for instance deviations from the acceptance criteria for quality control defined in this QAPP and its addendums), resampling may be required.

The contractor must contact the UST project manager in the event that there are any deviations from the QAPP and the UST project manager will determine if the data is acceptable or if resampling is required. If data is accepted that deviates from the QAPP, the data will be used for screening purposes only and the data will be annotated as such.

If a laboratory is found to have lost certification for any of the performed analysis, the data will be used for informational purposes only and annotated as such.

The contractor's laboratory will provide a list of data qualifier flags and definition for each in the QAPP Addendum.

D2 Data Validation and Verification Methods

The objective of this section is to describe how data is reviewed. It has been noted that the Analytical Laboratories have internal review systems in place to verify the data before it leaves the lab.

Verification of the sample data is done by the laboratory. Verification of the entire project including the data is performed by the Contractor's Office. A checklist is used by the Contractor (see Appendix K) to ensure that this is a thorough check on not only the completeness of the data but adherence to the QAPP. The contractor will include this checklist as part of the final report so that validation can be done. The list will include any anomalies noted in the field notes, the data, or the sample narrative from the laboratory. All deviations from the acceptable criteria and potential impacts affecting the usability of the data shall be reported by the data supplier.

Management Division staff will validate the analytical and project data supplied to ensure compliance with the formal and/or informal Data Quality Objectives stated in all approved work plans, permit provisions, enforcement order provisions, and the applicable federal and/or state guidance documents. Validation of the data by the Project Manager shall include a check on

1. Completeness of the data;
2. Adherence to proper sample preservation, transport, or handling protocols;
3. Proper use of sample collection procedures;
4. Proper use of quality control criteria;
5. Documentation of all data;
6. Ability to reconstruct all field sampling procedures through documentation and records of such procedures;
7. Ability to trace data in the final report to a specific sampling site, date, and time;
8. Appropriateness of the data as related to specific data quality objectives.

Upon receiving the final report the SCDHEC project manager will validate the project data by first reading the report and reviewing the checklist, noting the anomalies listed as well as those seen in the report. Then

the Project Manager will determine that all the wells were sampled or that a reason was given why a well was not sampled. Chain of custody (COC) for samples is examined to ensure that it is properly completed and documented the condition of samples during their preparation, packing, transportation, and analyses. The environmental contractors and analytical laboratories shall be responsible for reporting and correcting all sample handling procedures that deviate from the approved Data Quality Objectives and/or other project specific requirements. The time the sample was collected until it was received by the laboratory is checked for consistency---and for time travel (meaning the sample was received before it was collected or other inconsistencies). The temperature upon receipt is also checked. The Validator will also determine if the Lab was certified throughout the study.

The lab reports are examined to make sure that all required analytes are present and were analyzed according to the requirements of the QAPP. The data is further examined against historical data to note changes and anomalies. If data anomalies become a concern and cannot be explained, SCDHEC may arrange for an independent verification by resampling or refer to the Regulatory Section of UST for an investigation of a potential subsequent release. QC data is examined for completeness and adherence to the requirements of the QAPP. This examination includes an examination to ensure that necessary corrective actions have been taken when QC does not meet QAPP or method requirements. The contractor is responsible for ensuring that the QC requirements have been met and is not supposed to submit a report until this has been done. This review by the Project Manager serves as a second check.

Validation is also done on the well construction and boring logs. The records are reviewed for completeness and anomalies. Certification of the well driller is checked. The field measurements are examined to ensure that the wells were purged in accordance with the QAPP. Lastly, the Disposal Manifest is checked to ensure that the contractor has included this in the report.

Any anomalies or items that do not meet the requirements of the QAPP are noted in a Verification, Validation and Usability Report. This is generated by the Project Manager and is based on his findings during the validation, but can include items from the Contractors verification process as well as conferences with the contractor concerning problems and the corrective action to those problems. This Report is scanned in and associated with the electronic version of the Contractor's final report.

	Activity
Data Deliverables and QAPP	Ensure that all required information on sampling and analysis was provided (including planning documents).
Analytes	Ensure that required lists of analytes were reported as specified.
Chain-of-Custody	Examine the traceability of the data from time of sample collection until reporting of data. Examine chain-of-custody records against contract, method, or procedural requirements.
Holding Times	Identify holding time criteria, and either confirm that they were met or document any deviations. Ensure that samples were analyzed within holding times specified in method, procedure, or contract requirements. If holding times were not met, confirm that deviations were documented, that appropriate notifications were made (consistent with procedural requirements), and that approval to proceed was received prior to analysis.
Sample Handling	Ensure that required sample handling, receipt, and storage procedures were followed, and that any deviations were documented.
Sampling Methods and Procedures	Establish that required sampling methods were used and that any deviations were noted. Ensure that the sampling procedures and field measurements met performance criteria and that any deviations were documented.
Analytical Methods and	Establish that required analytical methods were used and that any deviations were noted. Ensure

Procedures	that the QC samples met performance criteria and that any deviations were documented.
Data Qualifiers	Determine that the laboratory data qualifiers were defined and applied as specified in methods, procedures, or contracts.
Deviations	Determine the impacts of any deviations from sampling or analytical methods and SOPs. Consider the effectiveness and appropriateness of any corrective action.
Sampling Plan	Determine whether the sampling plan was executed as specified (i.e., the number, location, and type of field samples were collected and analyzed as specified in the QAPP).
Sampling Procedures	Evaluate whether sampling procedures were followed with respect to equipment and proper sampling support (e.g., techniques, equipment, decontamination, volume, temperature, preservatives, etc.).
Co-located Field Duplicates	Compare results of collocated field duplicates with criteria established in the QAPP.
Project Quantitation Limits	Determine that quantitation limits were achieved, as outlined in the QAPP and that the laboratory successfully analyzed a standard at the QL.
Confirmatory Analyses	Evaluate agreement of laboratory results.
Performance Criteria	Evaluate QC data against project-specific performance criteria in the QAPP (i.e., evaluate quality parameters beyond those outlined in the methods).
Data Qualifiers	Determine that the data qualifiers applied were those specified in the QAPP and that any deviations from specifications were justified.
Validation Report	Summarize deviations from methods, procedures, or contracts. Include qualified data and explanation of all data qualifiers.

Table 12 Validation Activities

D3 Reconciliation with User Requirements

The project manager shall ensure that the data collected address the needs to evaluate the UST site and meet the specific Data Quality Objectives specified previously. This is done in conjunction with data verification and validation. The Usability Report will be part of the Verification, Validation and Usability report discussed in Section D2. This will document problems and corrective action throughout the project and discuss findings in the data and report that appear to be anomalous, but do not significantly impact the usability of data as a whole. Because data generated with significant deviations from the requirements of the QAPP will be rejected and because of the nature of the work (biased sampling), all data will have the same expected uncertainties and there will be no limitations on data use.

Item	Assessment Activity
Data Deliverables and QAPP	Ensure that all necessary information was provided, including but not limited to validation results.
Deviations	Determine the impact of deviations on the usability of data.
Sampling Locations, Deviation	Determine if alterations to sample locations continue to satisfy the project objectives.
Chain-of-Custody, Deviation	Establish that any problems with documentation or custody procedures do not prevent the data from being used for the intended purpose.
Holding Times, Deviation	Determine the acceptability of data where holding times were exceeded.
Damaged Samples, Deviation	Determine whether the data from damaged samples are usable. If the data cannot be used, determine whether resampling is necessary.
PT Sample Results, Deviation	Determine the implications of any unacceptable analytes (as identified by the PT sample results) on the usability of the analytical results. Describe any limitations on the data.

SOPs and Methods, Deviation	Evaluate the impact of deviations from SOPs and specified methods on data quality.
QC Samples	Evaluate the implications of unacceptable QC sample results on the data usability for the associated samples. For example, consider the effects of observed blank contamination.
Matrix	Evaluate matrix effects (interference or bias).
Meteorological Data and Site Conditions	Evaluate the possible effects of meteorological (e.g., wind, rain, temperature) and site conditions on sample results. Review field reports to identify whether any unusual conditions were present and how the sampling plan was executed.
Comparability	Ensure that results from different data collection activities achieve an acceptable level of agreement.
Completeness	Evaluate the impact of missing information. Ensure that enough information was obtained for the data to be usable (completeness as defined in PQOs documented in the QAPP).
Background	Determine if background levels have been adequately established (if appropriate).
Critical Samples	Establish that critical samples and critical target analytes/COCs, as defined in the QAPP, were collected and analyzed. Determine if the results meet criteria specified in the QAPP.
Data Restrictions	Describe the exact process for handling data that do not meet PQOs (i.e., when measurement performance criteria are not met). Depending on how those data will be used, specify the restrictions on use of those data for environmental decision-making.
Usability Decision	Determine if the data can be used to make a specific decision considering the implications of all deviations and corrective actions
Usability Report	Discuss and compare overall precision, accuracy/bias, representativeness, comparability, completeness, and sensitivity for each matrix, analytical group, and concentration level. Describe limitations on the use of project data if criteria for data quality indicators are not met.

Table 13 Considerations for Usability Assessment

Appendix A: UST Management Division RBCA Decision Making Flow Chart

UST Decision Making Flowchart

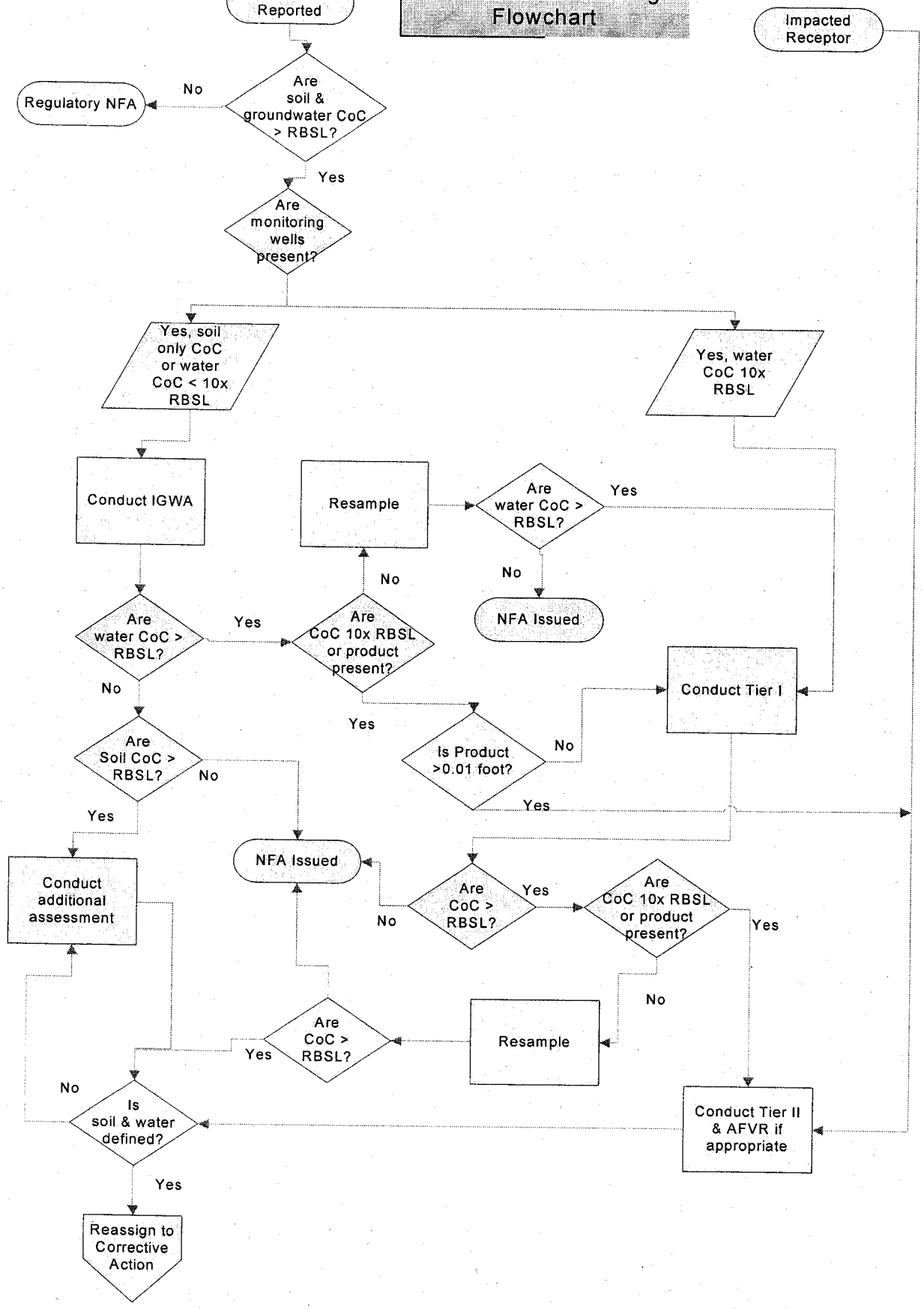

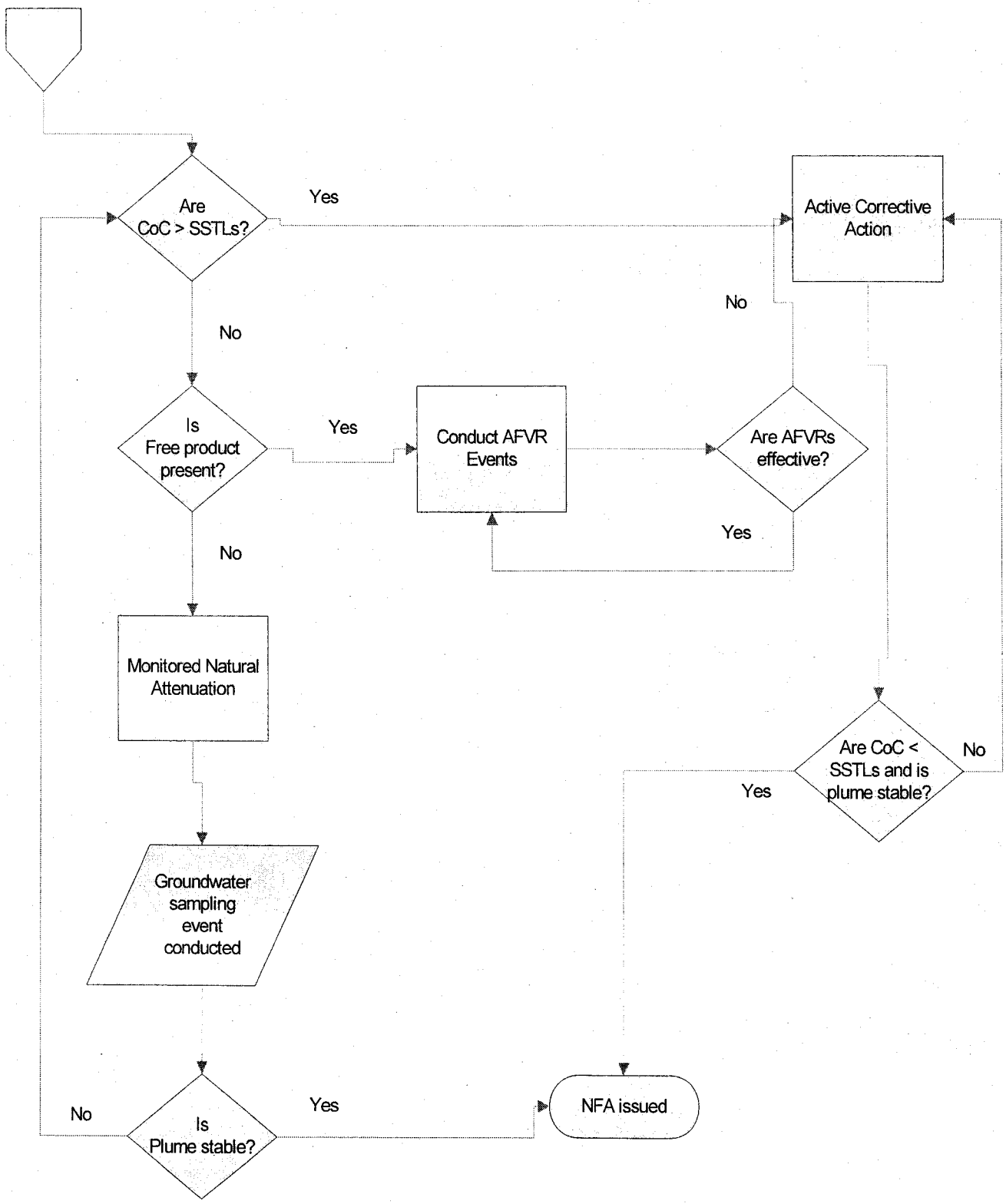
Are CoC > SSTLs?
Yes
Active Corrective Action
No
Is Free product present?
Yes
Conduct AFVR Events
Are AFVRs effective?
No
Yes
No
Monitored Natural Attenuation
Are CoC < SSTLs and is plume stable?
No
Yes
Groundwater sampling event conducted
NFA issued
No
Is Plume stable?
Yes

Appendix B: Contractor Addendum

Note to Contractors and those using this Addendum form:

1. **Once the form is completed, DELETE THIS PAGE**
2. Instructions for filling in this Addendum are in red as are suggestions for what needs to go in the document. Tables and other figures that can be used as part of the Addendum---just adjusted for the project will be in black. **Anything in red should be deleted out of the QAPP Addendum.**
3. In each Section there is generic information or instructions, however, please refer to the SC DHEC QAPP Guide available at http://www.scdhec.gov/environment/envserv/qaguidance.htm
4. This is considered an ADDENDUM to the UST Programmatic QAPP. While the Programmatic QAPP gives specific direction, this addendum will fill in site specific/lab specific/contractor specific information. Please refer to each section of the UST QAPP as this Addendum is prepared. Realize that this Addendum is supposed to be sit
5. For help with the parts of the QAPP call the SC DHEC Office of Quality Assurance (OQA) at 803-896-0862 or 0981. For help with specific UST issues please contact your UST Project Manager.
6. Please understand that you are responsible for anything in the programmatic QAPP as well as what is in the Addendum you produce for the project.

Section A: Project Management

A1 Title and Approval Page

Quality Assurance Project Plan
Addendum to the SC DHEC UST Programmatic QAPP
For

_____
Name of Project/Site and UST Permit Number

_____
Site Location (Address, City, State)

Prepared by:_____

_____
Affiliation and Contact Information

Date:_____
Day/Month/Year

_____
Name of Certified Contractor

Approvals

Name
SC DHEC Project Manager _____ Date_____
Signature

Name
Organization QA Manager _____ Date_____
Signature

Name
Site Rehabilitation Contractor _____ Date_____
Signature

Name
Laboratory Director _____ Date_____
Signature

A2 Table of Contents

A3 Distribution List

The distribution list is a list of individuals either directly participating in the Project or overseeing the project. Those listed in the distribution list in the Master QAPP are to receive a copy of the QAPP. Those listed below will receive a copy of the Master QAPP and the Site-Specific QAPP Addendum as well as any updates/revisions. Please notice that some DHEC titles are already listed below and along with their addresses. The writer of the QAPP Addendum is to identify the SCDHEC Technical Project that is assigned to this specific project in the table below. Additional rows are left for other personnel who are essential to this project either from SC DHEC, or subcontractors.

Name	Title	Organization/Address	Telephone Number	Fax Number	Email Address
	SC DHEC Technical Project Manager	Assessment and Corrective Action Division, SCDHEC, UST Management Division, 2600 Bull St., Columbia, SC, 29201	803-896-6241	803-896-6245	
	Site Rehabilitation Contractor				
	Field Manager				
	Well Services/Driller				
	Laboratory Director				

Table 1A Addendum Distribution List

A4 Project Organization

The Master UST QAPP has specific roles and the responsibilities of each role outlined in Section A4, however, personnel assigned to these roles must be identified in this QAPP Addendum. Anyone performing essential functions in this project (not given in the Master UST QAPP) should be given below and their duties outlined. The Table below may be used to do this or the Roles may simply be listed as they are in the Master UST QAPP and this Table can be deleted. If there are no other roles to be given, delete the Table below.

Role from the UST Master QAPP	Name of person in this Role for this Project	Organization/Address	Telephone Number	Fax Number	Email Address
Project Manager		Assessment and Corrective Action Division, SCDHEC, UST Management Division, 2600 Bull St., Columbia, SC, 29201	803-896-6241	803-896-6245	
Site Rehabilitation Contractor					
Field Manager					
Analytical Laboratory Director					
Soil Boring and Monitoring Well Driller					
Project Verifier					

Table 2A Addendum Role Identification and Contact Information

An organization chart is necessary for every project. The organization chart below is an example, but it can be used to construct the organizational chart for this project.

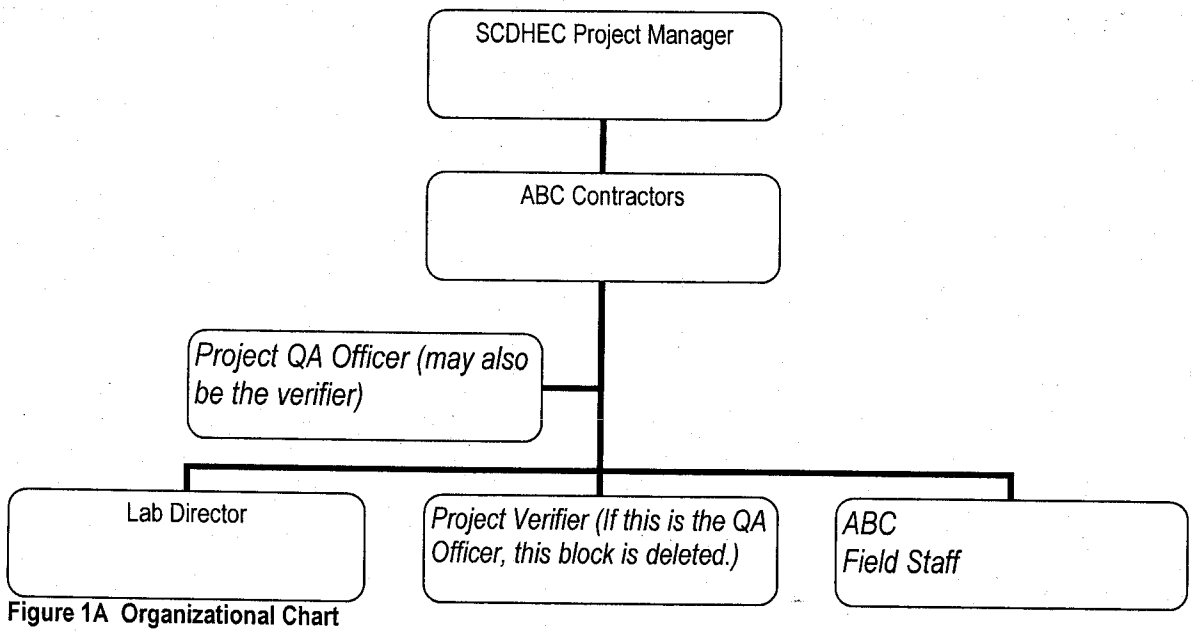

Figure 1A Organizational Chart

A5 Problem Definition/Background

Discuss the background (as much as is known) of the site and appropriate historical information, and why this site is being assessed.

Please answer the following: Does this project fall under UST or Brownfields area?

A6 Project/Task Description

1. ***Summarize what is known about the work to be done. This can be a short sentence indicating what the Scope of this project is (see Master QAPP Section A6).***

2. ***The work will begin within _____ after cost approval and sampling should be complete by_____.***

3. ***Are there are time or resource constraints? Include those factors that may interfere with the tentative schedule.***

A7 Data Quality Objectives (DQOs) and Data Quality Indicators (DQIs)

The Addendum will complete what is given in the Programmatic QAPP Guide on the DOQ Process. Specifically this is Step 4: Defining the Study boundary—which includes a map of the property (Attachment) to show what the extent of the study will cover.

Detail the geographical area that is to be part of the project. Maps should be included to show not only the topography and the geographical area of the State, but also to show more detail of the site itself including property lines.

A8 Training and Certificates

It is necessary to state which individuals must have training/licensing in order to do a job on this project, who they are and when they received the training or the license. Examples would be well drillers that must be licensed in SC. This information goes in the table. Below the table you must indicate who is responsible for ensuring that personnel involved in the project have the proper training and where the records of the training are kept. The Labs that will be used for this project must be certified by the SCDHEC Office of Environmental Certification for every analysis that they will perform.

The information for the Laboratories and their SC DHEC Certificate number must be included in this addendum. Contractors performing field analysis must also be certified for those analyses.

Required training and licenses:

Title/Job	Name	Training Required	Date training received	Type of License	License Number

Table 3A Required Training and Licenses

_____(Name)_____ of _____(Company)_____ is responsible to ensuring that personnel participating in this project receive the proper training. All training records will be stored in the following location:_____

It is understood that training records will be produced if requested by SC DHEC.

The Following Laboratory(ies) will be used for this Project:
All labs being used (including ones subcontracted) must be included.

Field Analyses Certification*

Full Name of the Laboratory/Contractor performing Field Analyses_____
_____
Name of Lab Director_____
SC DHEC Certification Number_____
Parameters this Lab/Contractor will analyze for this project (check all that apply):

___pH ___ Dissolved Oxygen ___ Temperature ___ Conductivity ____ Turbidity

Other _____**(list)**

***NOTE: Any entity performing reportable field analyses must be listed above and must have SC DHEC Certification for all field analyses that they are performing.**

Commercial Lab(s)

Please give the information as listed below for each Laboratory that is being used for sample analysis.

Full Name of the Laboratory_____
Name of Lab Director_____
SC DHEC Certification Number_____
Parameters this Lab will analyze for this project:

Full Name of the Laboratory_____
Name of Lab Director_____
SC DHEC Certification Number_____
Parameters this Lab will analyze for this project:

(If more than 2 labs are being used, copy the above 4 lines and insert into this document)

Please note: SC DHEC may require that the contractor submit some or all of the Laboratory's SOPs as part of this QAPP.

A9 Documents and Records

Personnel will receive the most current version of the QAPP Addendum via:
(Check all that apply)

____US Mail ____Courier ____Hand delivered

Other (please specify):_____

This section requires a list of the records—pertinent to the project- produced during the project by the Contractor, Laboratories, and Subcontractors. Please note that the Programmatic QAPP requires records to be kept at least 5 years.

Record	Produced By	Hardcopy/ Electronic	Storage Location For how long?	Archival

Table 4A Record Identification, Storage, and Disposal

Section B Measurement/Data Acquisition

B1 Sampling Process/Experimental Design

In the table below list the schedule for project activities. This would include drilling the wells, developing the wells, collecting samples and so on.

Item	Start Date	End Date	Comments

Table 5A Sampling Activities

B2 Sampling Methods

Please note: The contractor must follow sampling protocols as given in the UST QAPP.

***Estimate* the number of samples of each matrix that are expected to be collected:**

Soil _____

Ground Water from monitoring wells _____

From Drinking/Irrigation water wells _____

From surface water features _____

Total number of Water samples _____

In this next part indicate if the samples will be homogenized and split and describe the way this will be done.

The samples will be (check as many as apply): ____Homogenized ____Split

If any of the above are circled please indicate how will it be done and the equipment needed.

Will Sampling Equipment have to be cleaned and decontaminated or is everything disposable?

If sampling equipment must be cleaned please give a detailed description of how this is done and the disposal of by-products from the cleaning and decontamination.

Identify any equipment and support facilities needed. This may include such things as Fed-ex to ship the samples, a Geoprobe, field analysis done by another contractor (who must be certified), and electricity to run sampling equipment.

Address the actions to be taken when problems occur in the field, and the person responsible for taking corrective action and how the corrective action will be documented.

Failure	Response	Documentation	Individual Responsible

Table 6A Field Corrective Action

B3 Sample Handling and Custody

This section deals with how samples are physically handled. Please answer the following questions and please attach a copy of the Lab's chain of custody. If multiple labs are used along with multiple chains of custodies, all of them must be attached. The chain of custody procedure should describe how the sample's location is accounted from collection to disposal (for each lab). If the laboratory has a SOP for this, it may be attached as long as sampling personnel understand that they must adhere to it. Please note that holding times and preservation for samples must adhere to the requirements in the Master UST QAPP. Preservation and sample handling details must be given in either a case narrative or on the Chain of Custody.

1. ***How will the samples get from the Site to the Lab to ensure holding requirements are met?***

2. ***How will the contactors cool the samples and keep the samples cool?***

3. ***How will the lab determine the temperature of the samples upon receipt? Will they be using a temperature blank?***

4. ***Where will the samples be stored in the Lab once they are received?***

5. ***Describe the chain of custody procedure and attach a copy of each chain of custody that will be used. If a Chain of Custody SOP exists from the Lab and the Contractor is willing to adhere to it, then this may be attached.***

B4 Analytical Methods

This section will give specific information about exactly which Methods will be used for analysis. The allowable methods are given in the Programmatic QAPP, but often there are choices so the Contractor's addendum must list the exact methods that will be used. Although the SOPs of the lab are reviewed during their Laboratory Certification Process, UST or the OQA may require submission of some or all SOPs. SOPs may be identified by the full nomenclature from the lab or by abbreviation as long as the abbreviations are explained.

The tables below may be used for the first requirement.

1. ***Identify the SOPs which will be used to analyze the samples, the method which the SOP references and the equipment or instrumentation that is needed:***

Parameter	SOP ID*	Method Referenced	Equipment	Comments

Table 7A Analytical SOPs and Referenced Methods

- **This can be a full name of a SOP, an abbreviation, or a number. In the latter two cases, the abbreviation or number must be associated with the full name of the SOP. See also Table 8A SOP Abbreviation Key.**

Abbreviation	Lab Identification of this SOP	Full Name of the SOP

Table 8A SOP Abbreviation Key

Item 2 may be in an attachment from the Lab from their QA/QC plan or it may be a table (see Table 8A) or a combination because the Lab has a QA/QC plan that states what is done, but field personnel do not.

2. Identify procedures to follow when failures occur, identify the individual responsible for corrective action and appropriate documentation:

Failure	Response	Documented Where?	Individual Responsible

Table 9A Corrective Action Procedures

3. Identify sample disposal procedures.

Analysis	Matrix	Schedule for disposal	Method for disposal	Comments

Table 10A Sample Disposal

4. Provide SOPs for the Kerr Method or the Ferrous Iron Method if these are parameters for this study. This can be attached or written here. If attached please note that it is an attachment and where it is located (if applicable).

B5 Quality Control Requirements:

All QC will follow the requirements laid out in Section B5 of the UST Programmatic QAPP.

B6 Instrument and Equipment Testing, Inspection and Maintenance

1. Identify all field and laboratory equipment needing periodic maintenance, the schedule for this, and the person responsible. Not the availability and location of spare parts.

Instrument	Serial Number	Type of Maintenance	Frequency	Parts needed/Location	Person responsible

Table 11A Instrument and Equipment Maintenance

2. Identify the testing criteria for each lab or field instrument that is used to ensure the equipment is performing properly. Indicate how deficiencies, if found, will be resolved, re-inspections performed, and effectiveness of corrective action determined and documented. Give the person responsible for this

Instrument/Equipment & Serial Number	Type of Inspection	Requirement	Individual Responsible	Resolution of Deficiencies

Table 12A Instrument and Equipment Inspection

B7 Instrument Calibration and Frequency

1. Identify equipment, tools, and instruments for field or lab work that should be calibrated and the frequency.
2. Describe how the calibrations should be performed and documented, indicating test criteria and standards or certified equipment.
3. Identify how deficiencies should be resolved and documented. Identify the person responsible for corrective action.

Instrument	Calibration Procedure	Frequency of Calibration	Acceptance Criteria	Corrective Action (CA)	Person Responsible for CA	SOP Reference*

Table 13A Instrument Calibration Criteria and Corrective Action

*** This can be a full name of a SOP, an abbreviation, or a number. In the latter two cases, the abbreviation or number must be associated with the full name of the SOP. See also Table 8A SOP Abbreviation Key.**

B8 Inspection/Acceptance Requirements for Supplies and Consumables

1. Identify critical supplies and consumables for field and laboratory, noting supply source, acceptance criteria, and procedures for tracking, storing and retrieving these materials.
2. Identify the individual(s) responsible for this.

Consumables are things like disposable bailers, nitrile gloves, sample containers, and so on.

Item	Vendor	Acceptance criteria	Handling/Storage Conditions	Person responsible for inspection and tracking.

Table 14A List of Consumables and Acceptance Criteria

B9 Data Acquisition Requirements (Non-Direct Measurements)

This section discusses data that was not generated by this project. This includes historical data, information Tax Maps, computer data bases, weather data from the National Weather Service, Scientific Literature, and so on. This discussion must include information about why this data is usable for this project.

1. Identify data sources, for example, computer databases or literature files, or models that should be accessed or used.
2. Describe the intended use of this information and the rationale for their selection, i.e., its relevance to project.
3. Indicate the acceptance criteria for these data sources and/or models.

Data Source	Used for	Justification for use in this project	Comments

Table 15A Non-Direct Measurements

4. Identify key resources/support facilities needed. This will probably be Non-applicable for most projects. This would be addressed if the contractor employed someone to provide data modeling, database upkeep, and so on.

B10 Data Management

1. Describe the data management scheme from field to final use and storage.

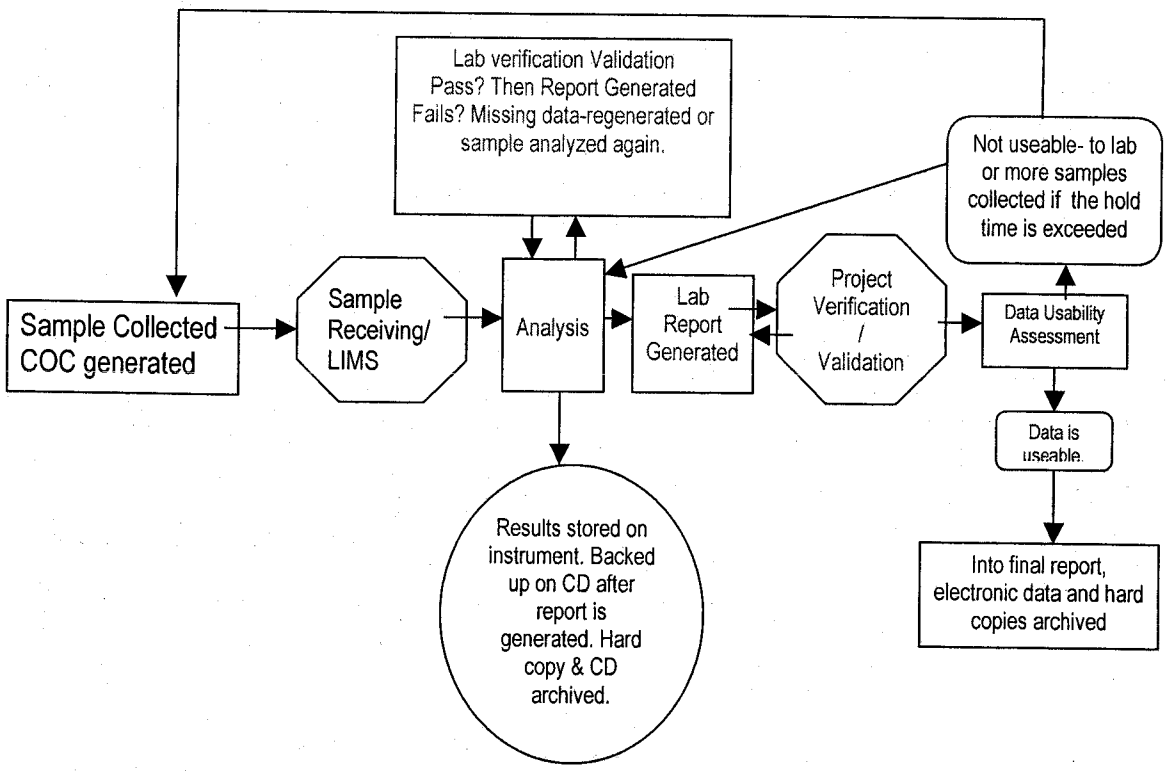

Figure 2 Example of a Data Management Scheme

A diagram, such as the one above, can be used to satisfy Item 1 or a description can be used instead.

2. How does the lab and field staff ensure that no unauthorized changes are made to the chain of custody, sampling notebooks, laboratory notebooks and computer records?
3. How does the lab ensure that there are no errors in samples records including times when sample information is compiled, data calculated and/or transmitted via email, LIMS (Laboratory Information System).

Items 2 and 3: This is a discussion of how errors will be avoided. This includes errors in the field paperwork, chain of custody and laboratory processes. Usually this is done by overview of a supervisor who looks over work or rechecks calculations. Software issues also come into play here. Is there a process to keep data from being corrupted or restoring it if the data becomes corrupted? Is there a process to avoid data loss though computer malfunctions? What about security of the data? Is the data protected from tampering? How does the Lab or contractor know that the software/hardware that is used is acceptable? In each process identify who is responsible for oversight. For instance the LIMS staff might be responsible for ensuring data security while the data is in LIMS. The metals lab supervisor may be the one releasing the data AFTER it has been inspected for errors.

4. How will the data be archived once the report is produced? How can it be retrieved? (This applies to both electronic and hard copies).

Section C Assessment and Oversight

C1 Assessment and Response Actions

1. *The Contractor is supposed to observe field personnel daily during sampling activities to ensure samples are collected and handled properly and report problems to DHEC within 24 hours. . Please state that is responsible for doing this and what observations will be made. Will this person have the authority to stop work if severe problems are seen?*
2. *The SCDHEC UST QAPP states that the Lab will receive an Offsite Technical Assessment. For this project, what assessments will be done on the Commercial Lab(s) that are being used—other than their certification audit? When or how often are these done? Who will the results be given to and who has the ability to stop work if problems are severe?*

C2 Reports to Management

See the SC DHEC UST Programmatic QAPP (UST Master QAPP).

Section D Data Validation and Usability

See the SC DHEC UST Programmatic QAPP (UST Master QAPP).

Appendix C: RBSL Look-Up Tables

Table C1
RBSL'S for Ground Water

Chemical of Concern	Concentration
Benzene	5 µg/L
Toluene	1,000 µg/L
Ethylbenzene	700 µg/L
Xylenes	10,000 µg/L
Total PAHs#	25 µg/L
MTBE	40 µg/L
Naphthalene	25 µg/L
1,2-DCA	5 µg/L
EDB λ	0.005 µg/L
Lead λ	15 µg/L
Arsenic **	50 µg/L
Barium **	2,000 µg/L
Cadmium **	5 µg/L
Chromium **	100 µg/L
Mercury **	2 µg/L
Selenium **	50 µg/L
Silver **	5 µg/L

In calculating SSTLs for individual PAHs (Benzo(a)anthracene, Benzo(b)flouranthene, Benzo(k)flouranthene, Chrysene, and Dibenz(a,h)anthracene), please use an RBSL of 10 µg/L for each CoC.

λ UST system was in operation prior to 1991.

** For waste oil UST releases only.

Table C2
RBSLs for Sandy Soil determined based on groundwater RBSLs.

Chemical of Concern	RBSL (mg/Kg) (for all separation distances)
Benzene	0.007
Toluene	1.450
Ethylbenzene	1.150
Xylenes	14.500
Naphthalenes	0.036
Benzo(a)anthracene	0.66
Benzo(b)flouranthene	0.66
Benzo(k)flouranthene	0.66
Chrysene	0.66
Dibenz(a,h)anthracene	0.66

Table C3
RBSLs for Clay-rich Soil (mg/kg)

Separation Distance → **↓ Chemical of Concern**	**<10 ft**	**10-15 ft**	**15-20 ft**	**20-25 ft**	**25-30 ft**	**>30 ft**
Benzene	0.003	0.008	0.037	0.187	1.010	5.665
Toluene	0.627	1.167	3.630	12.085	41.885	149.125
Ethylbenzene	1.551	6.168	76.950	1114.5	-	-
Xylenes	13.010	22.495	61.250	176.800	529.000	-
Naphthalenes	0.047	0.069	0.139	0.292	0.625	1.350
Benzo(a)anthracene	0.066*	-	-	-	-	-
Benzo(b)flouranthene	0.066*	7439.0	-	-	-	-
Benzo(k)flouranthene	0.066*	-	-	-	-	-
Chrysene	0.066*	13.099	59.800	298.550	1573.000	-
Dibenz(a,h)anthracene	0.066*	-	-	-	-	-

Note: Separation Distance is measured from the depth of the worst case soil sample to the top of the water table.

* **Limits are increased to levels above the calculated values to reasonably attainable laboratory reporting limits.**

\- **Indicates that the values are above saturation levels**

Table C4
RBSLs for Inhalation of vapors

Chemical of Concern	RBSL ($\mu g/m^3$)
Benzene	0.22
Toluene	420
Ethylbenzene	1,100
Xylene	7,300
Methyl Tert-Butyl Ether	3,100

Note: RBSLs for the PAHs are not of concern because of their low volatility.

Table C5
RBSLs for Ingestion or Dermal Contact with Surficial Soil

Chemical of Concern	Residential (mg/kg)	Industrial (mg/kg)
Benzene	12	100
Toluene	16,000	410,000
Ethylbenzene	7,800	200,000
Xylene	160,000	4,100,000
Methyl Tert-Butyl Ether	390	10,000
Naphthalenes	3,100	41,000
Benzo(a)anthracene	0.88	3.9
Benzo(b)fluoranthene	0.88	3.9
Benzo(k)fluoranthene	8.8	39
Chrysene	88	390
Dibenzo(a,h)anthracene	0.088	0.39

Appendix D: Site Conceptual Models

Site Conceptual Model - CURRENT LAND USE

Media (for exposure)	Exposure Route	Pathway Selected for Evaluation? (Yes or No)	Exposure point or Reason for Non-Selection	Data Requirements (IF pathway selected)
Air	Inhalation	Yes No		
	Explosion Hazard	Yes No		
Ground-Water	Ingestion	Yes No		
	Dermal Contact	Yes No		
	Inhalation	Yes No		
Surface Water	Ingestion	Yes No		
	Dermal contact	Yes No		
	Inhalation	Yes No		
Surficial Soil	Ingestion	Yes No		
	Dermal contact	Yes No		
	Inhalation	Yes No		
	Leaching to Ground-Water	Yes No		
Subsurface Soil	Ingestion	Yes No		
	Dermal contact	Yes No		
	Inhalation	Yes No		
	Leaching to Ground-Water	Yes No		

Site Conceptual Model - FUTURE LAND USE

Media (for exposure)	Exposure Route	Pathway Selected for Evaluation? (Yes or No)	Exposure point or Reason for Non-Selection	Data Requirements (IF pathway selected)
Air	Inhalation	Yes No		
	Explosion Hazard	Yes No		
Ground-Water	Ingestion	Yes No		
	Dermal Contact	Yes No		
	Inhalation	Yes No		
Surface Water	Ingestion	Yes No		
	Dermal contact	Yes No		
	Inhalation	Yes No		
Surficial Soil	Ingestion	Yes No		
	Dermal contact	Yes No		
	Inhalation	Yes No		
	Leaching to Ground-Water	Yes No		
Subsurface Soil	Ingestion	Yes No		
	Dermal contact	Yes No		
	Inhalation	Yes No		
	Leaching to Ground-Water	Yes No		

Appendix E: Analytical Parameters and Methods

Table E1
Analytical Precision and Accuracy for Water Samples

Analyte	Analytical Method	Reporting Limit*		Laboratory Control Sample (LCS) % Recovery	Matrix Spike Samples % Recovery	Precision Relative Percent Difference %RPD
		Groundwater	Drinking Water and Receptors			
Benzene	5030B with 8260B	5 µg/L	2 µg/L	70 – 130%	70 – 130%	20
Toluene	5030B with 8260B	5 µg/L	2 µg/L	70 – 130%	70 – 130%	20
Ethylbenzene	5030B with 8260B	5 µg/L	2 µg/L	70 – 130%	70 – 130%	20
Total Xylenes	5030B with 8260B	10 µg/L	4 µg/L	70 – 130%	70 – 130%	20
Naphthalene	5030B with 8260B	5 µg/L	5 µg/L	70 – 130%	70 – 130%	20
1,2-Dichloroethane	5030B with 8260B	5 µg/L	5 µg/L	70 – 130%	70 – 130%	20
MTBE	5030B with 8260B	5 µg/L	5 µg/L	70 – 130%	70 – 130%	20
EDB	8011	0.02 µg/L	0.02 µg/L	60 – 140%	50 – 150%	20
ETBE	5030B with 8260B-oxy	100 µg/L	100 µg/L	70 – 130%	70 – 130%	20
ETBA (3,3-dimethyl-1-butanol)	5030B with 8260B-oxy	100 µg/L	100 µg/L	70 – 130%	70 – 130%	20
TAME	5030B with 8260B-oxy	10 µg/L	10 µg/L	70 – 130%	70 – 130%	20
DIPE	5030B with 8260B-oxy	10 µg/L	10 µg/L	70 – 130%	70 – 130%	20
TBF	5030B with 8260B-oxy	100 µg/L	100 µg/L	70 – 130%	70 – 130%	20
TBA	5030B with 8260B-oxy	100 µg/L	100 µg/L	70 – 130%	70 – 130%	20
TAA	5030B with 8260B-oxy	100 µg/L	100 µg/L	70 – 130%	70 – 130%	20
Ethanol	5030B with 8260B-oxy	1,000 µg/L	1,000 µg/L	70 – 130%	70 – 130%	20
1,2,4- and 1,3,5-trimethyl benzene isomers	5030B with 8260B	5 µg/L	5 µg/L	70 – 130%	70 – 130%	20

Analyte	Analytical Method	Reporting Limit*		Laboratory Control Sample (LCS) % Recovery	Matrix Spike Samples % Recovery	Precision Relative Percent Difference %RPD
		Groundwater	Drinking Water and Receptors			
n-butyl, sec-butyl, and tert-butyl benzene isomers	5030B with 8260B	5 µg/L	5 µg/L	70 – 130%	70 – 130%	20
Isopropyl benzene	5030B with 8260B	5 µg/L	5 µg/L	70 – 130%	70 – 130%	20
n-propyl benzene	5030B with 8260B	5 µg/L	5 µg/L	70 – 130%	70 – 130%	20
Full List 8260B Scan	5030B with 8260B	Analyte specific	Analyte specific	70 – 130%	70 – 130%	20
Benzo(a)anthracene	3510C with 8270D	10 µg/L	NA	70 – 130%	40 – 150%	20
Benzo(b)flouranthene	3510C with 8270D	10 µg/L	NA	70 – 130%	40 – 150%	20
Benzo(k)flouranthene	3510C with 8270D	10 µg/L	NA	70 – 130%	40 – 150%	20
Chrysene	3510C with 8270D	10 µg/L	NA	70 – 130%	40 – 150%	20
Dibenz(a,h)anthracene	3510C with 8270D	10 µg/L	NA	70 – 130%	40 – 150%	20
TPH (Oil & Grease)	9070A	40 mg/L	NA	78 – 114%	78 - 114	20
Arsenic	6020A or 7010	5 µg/L	5 µg/L	80 - 120%	75 – 125%	20
Barium	6010C or 6020A	50 µg/L	50 µg/L	80 - 120%	75 – 125%	20
Cadmium	6010C, 6020A, or 7010	1 µg/L	1 µg/L	80 - 120%	75 – 125%	20
Chromium	6010C, 6020A, or 7010	5 µg/L	5 µg/L	80 - 120%	75 – 125%	20
Lead	6010C, 6020A, or 7010	5 µg/L	5 µg/L	80 - 120%	75 – 125%	20
Mercury	7470A	0.2 µg/L	0.2 µg/L	80 - 120%	75 – 125%	20
Selenium	6020A or 7010	5 µg/L	5 µg/L	80 - 120%	75 – 125%	20
Silver	6010C, 6020A, or 7010	5 µg/L	5 µg/L	80 - 120%	75 – 125%	20

Analyte	Analytical Method	Reporting Limit*		Laboratory Control Sample (LCS) % Recovery	Matrix Spike Samples % Recovery	Precision Relative Percent Difference %RPD
		Groundwater	Drinking Water and Receptors			
Nitrate	9210A or 9056A	100 µg/L	NA	NA	80-120%	20
Sulfate	9056A	1000 µg/L	NA	80 - 120%	80 - 120%	20
Methane	Kerr Method RSKSOP-175 rev 2, May 2004	10,000 µg/L	10,000 µg/L	85-115%	NA	NA
Ferrous Iron	SM3500-Fe D	10 µg/L	10 µg/L	90-110%	85-115%	≤ 20%
pH	9040	NA	NA	NA	NA	NA
Conductivity	9050A	10	10	NA	NA	NA
Turbidity	SM-2130	1	1	NA	NA	NA
Temperature	SM-2550B	NA	NA	NA	NA	NA
Dissolved Oxygen	SM-4500 O G	1,000 µg/L	1,000 µg/L	NA	NA	NA

*A reporting limit standard must be included as part of the calibration curve. Only linear regression models may be used for calibration curves.

Table E2

Analytical Precision and Accuracy for Soil Samples

Analyte	Analytical Method	Reporting Limit*	Laboratory Control Sample (LCS) % Recovery	Matrix Spike Sample % Recovery	Precision Relative Percent Difference %RPD
Benzene	5035 with 8260B	5 ug/Kg	70 – 130%	70 – 130%	20
Toluene	5035 with 8260B	5 ug/Kg	70 – 130%	70 – 130%	20
Ethylbenzene	5035 with 8260B	5 ug/Kg	70 – 130%	70 – 130%	20
Xylenes	5035 with 8260B	10 ug/Kg	70 – 130%	70 – 130%	20
Naphthalene	5030 with 8260B	5 ug/Kg	70 – 130%	50 – 150%	20
MTBE	5030 with 8260B	5 ug/Kg	70 – 130%	50 – 150%	20
Benzo(a)anthracene	3550C with 8270D	660 ug/Kg	70 – 130%	50 – 150%	20
Benzo(b)flouranthene	3550C with 8270D	660 ug/Kg	70 – 130%	50 – 150%	20
Benzo(k)flouranthene	3550C with 8270D	660 ug/Kg	70 – 130%	50 – 150%	20
Chrysene	3550C with 8270D	660 ug/Kg	70 – 130%	50 – 150%	20
Dibenz(a,h)anthracene	3550C with 8270D	660 ug/Kg	70 – 130%	50-150%	20
TPH (DRO)	3550C with 8015C	10 mg/Kg	70 – 130%	60 – 140%	20
TPH (GRO)	5035B with 8015C	10 mg/Kg	70 – 130%	60 – 140%	20
TPH (Oil & Grease)	9071B	10 mg/Kg	70 – 130%	60 – 140%	20
Arsenic	6020A or 7010	250 ug/Kg	80 - 120%	75 – 125%	20
Barium	6010C or 6020A	250 ug/Kg	80 - 120%	75 – 125%	20
Cadmium	6010C, 6020A, or 7010	250 ug/Kg	80 - 120%	75 – 125%	20
Chromium	6010C or 6020A	250 ug/Kg	80 - 120%	75 – 125%	20
Lead	6010C, 6020A, or 7010	250 ug/Kg	80 - 120%	75 – 125%	20
Mercury	7471B	10 ug/Kg	80 - 120%	75 – 125%	20
Selenium	6020A or 7010	250 ug/Kg	80 - 120%	75 – 125%	20
Silver	6010C, 6020A, or 7010	250 ug/Kg	80 - 120%	75 – 125%	20

Analyte	Analytical Method	Reporting Limit*	Laboratory Control Sample (LCS) % Recovery	Matrix Spike Sample % Recovery	Precision Relative Percent Difference %RPD
TCLP	1311	Applicable Method Limits			
Total Organic Carbon (TOC)**	9060	0.1 mg/Kg	90 - 110%	70 – 130%	20

* A reporting limit standard must be included as part of the calibration curve. Only linear regression models may be used for calibration curves.

** TOC must be performed using a TOC analyzer equipped with a soil sample attachment.

Appendix F: Preservation and Holding Times

Table F1
Sample Preservation and Holding Times for Groundwater

Analyte	Analytical Method	Container	Preservation	Holding Time
Benzene	5030 with 8260B	2 x 40 ml glass vials with Teflon-lined septum caps	Cool to 6° C and adjust pH to less than 2 with H_2SO_4 or HCl	14 days
Toluene	5030 with 8260B	2 x 40 ml glass vials with Teflon-lined septum caps	Cool to 6° C and adjust pH to less than 2 with H_2SO_4 or HCl	14 days
Ethylbenzene	5030 with 8260B	2 x 40 ml glass vials with Teflon-lined septum caps	Cool to 6° C and adjust pH to less than 2 with H_2SO_4 or HCl	14 days
Total Xylenes	5030 with 8260B	2 x 40 ml glass vials with Teflon-lined septum caps	Cool to 6° C and adjust pH to less than 2 with H_2SO_4 or HCl	14 days
Total Naphthalenes	5030 with 8260B	2 x 40 ml glass vials with Teflon-lined septum caps	Cool to 6° C and adjust pH to less than 2 with H_2SO_4 or HCl	14 days
1,2-Dichloroethane	5030 with 8260B	2 x 40 ml glass vials with Teflon-lined septum caps	Cool to 6° C and adjust pH to less than 2 with H_2SO_4 or HCl	14 days
MTBE	5030 with 8260B	2 x 40 ml glass vials with Teflon-lined septum caps	Cool to 6° C and adjust pH to less than 2 with H_2SO_4 or HCl	14 days
EDB	8011	2 x 40 ml glass vials with Teflon-lined septum caps	Cool to 6° C and adjust pH to less than 2 with HCl, Residual Chlorine present: add $Na_2S_2O_3$ to make 0.008% concentration	14 days
ETBE	5030B with 8260B-oxy	2 x 40 ml glass vials with Teflon-lined septum caps	Cool to 6° C and adjust pH to less than 2 with H_2SO_4 or HCl	14 days
ETBA (3,3-Dimethyl-1-butanol)	5030B with 8260B-oxy	2 x 40 ml glass vials with Teflon-lined septum caps	Cool to 6° C and adjust pH to less than 2 with H_2SO_4 or HCl	14 days
TAME	5030B with 8260B-oxy	2 x 40 ml glass vials with Teflon-lined septum caps	Cool to 6° C and adjust pH to less than 2 with H_2SO_4 or HCl	14 days
DIPE	5030B with 8260B-oxy	2 x 40 ml glass vials with Teflon-lined septum caps	Cool to 6° C and adjust pH to less than 2 with H_2SO_4 or HCl	14 days
TBF	5030B with 8260B-oxy	2 x 40 ml glass vials with Teflon-lined septum caps	Cool to 6° C and adjust pH to less than 2 with H_2SO_4 or HCl	14 days
TBA	5030B with 8260B-oxy	2 x 40 ml glass vials with Teflon-lined septum caps	Cool to 6° C and adjust pH to less than 2 with H_2SO_4 or HCl	14 days
TAA	5030B with 8260B-oxy	2 x 40 ml glass vials with Teflon-lined septum caps	Cool to 6° C and adjust pH to less than 2 with H_2SO_4 or HCl	14 days

Analyte	Analytical Method	Container	Preservation	Holding Time
Ethanol	5030B with 8260B-oxy	2 x 40 ml glass vials with Teflon-lined septum caps	Cool to 6° C and adjust pH to less than 2 with H_2SO_4 or HCl	14 days
1,2,4- and 1,3,5-trimethyl benzene isomers	5030B with 8260B	2 x 40 ml glass vials with Teflon-lined septum caps	Cool to 6° C and adjust pH to less than 2 with H_2SO_4 or HCl	14 days
n-butyl, sec-butyl, and tert-butyl benzene isomers	5030B with 8260B	2 x 40 ml glass vials with Teflon-lined septum caps	Cool to 6° C and adjust pH to less than 2 with H_2SO_4 or HCl	14 days
Isoproyl benzene	5030B with 8260B	2 x 40 ml glass vials with Teflon-lined septum caps	Cool to 6° C and adjust pH to less than 2 with H_2SO_4 or HCl	14 days
n-propyl benzene	5030B with 8260B	2 x 40 ml glass vials with Teflon-lined septum caps	Cool to 6° C and adjust pH to less than 2 with H_2SO_4 or HCl	14 days
Full List 8260B Scan	5030B with 8260B	2 x 40 ml glass vials with Teflon-lined septum caps	Cool to 6° C	7 days
Benzo(a)anthracene	3510C with 8270C	Amber glass container with Teflon-lined lid	Cool to 4° C	7 days until extraction 40 days after extraction
Benzo(b)flouranthene	3510C with 8270C	Amber glass container with Teflon-lined lid	Cool to 6° C	7 days until extraction 40 days after extraction
Benzo(k)flouranthene	3510C with 8270C	Amber glass container with Teflon-lined lid	Cool to 6° C	7 days until extraction 40 days after extraction
Chrysene	3510C with 8270C	Amber glass container with Teflon-lined lid	Cool to 6° C	7 days until extraction 40 days after extraction
Dibenz(a,h)anthracene	3510C with 8270C	Amber glass container with Teflon-lined lid	Cool to 6° C	7 days until extraction 40 days after extraction
TPH (Oil & Grease)	9070A	1 Liter Glass	Cool to 6° C pH to less than 2 with H_2SO_4 or HCl	28 days
Arsenic	6020A or 7010	Polyethylene or Glass	HNO_3 to pH <2	6 months

Analyte	Analytical Method	Container	Preservation	Holding Time
Barium	6010C or 6020A	Polyethylene or Glass	HNO_3 to pH <2	6 months
Cadmium	6010C, 6020A, or 7010	Polyethylene or Glass	HNO_3 to pH <2	6 months
Chromium	6010C, 6020A, or 7010	Polyethylene or Glass	HNO_3 to pH <2	6 months
Lead	6010C, 6020A, or 7010	Polyethylene or Glass	HNO_3 to pH <2	6 months
Mercury	7470A	Polyethylene or Glass	HNO_3 to pH <2	28 days
Selenium	6020A or 7010	Polyethylene or Glass	HNO_3 to pH <2	6 months
Silver	6010C, 6020A, or 7010	Polyethylene or Glass	HNO_3 to pH <2	6 months
Nitrate	9210 or 9056	Polyethylene or Glass	Cool to 4° C	48 hours
Sulfate	9056	Polyethylene or Glass	Cool to 4° C	28 days
Methane	Kerr Method RSKSOP-175 rev 2, May 2004	2 x 40 ml glass vials with Teflon-lined septum caps	Cool to 6° C, pH < 2 with 1:1 HCl	14 days
Ferrous Iron	SM3500-Fe D	Glass	None	24-48 hours
pH	9040B	NA	NA	Within 15 minutes
Conductivity	9050A	NA	NA	Within 15 minutes
Turbidity	SM-2130B	NA	NA	Within 15 minutes
Temperature	SM-2550B	NA	NA	Within 15 minutes
Dissolved Oxygen	SM-4500 O G	NA	NA	Within 15 minutes

Table F2

Sample Preservation & Holding Times for Soil

Analyte	Analytical Method	Container	Preservation	Holding Time
Benzene	5035 with 8260B	Per laboratory SOPs as approved by the SCDHEC Office of Environmental Laboratory Certification		
Toluene	5035 with 8260B			
Ethylbenzene	5035 with 8260B			
Xylenes	5035 with 8260B			
Total Naphthalenes	5035 with 8260B			
MTBE	5035 with 8260B			
Benzo(a)anthracene	3535A, 3540C, 3541, 3545A or 3550C with 8270D	Amber glass with Teflon-lined lid	Cool to 6° C	14 days until extraction 40 days after extraction
Benzo(b)flouranthene	3535A, 3540C, 3541, 3545A or 3550C with 8270D	Amber glass with Teflon-lined lid	Cool to 6° C	14 days until extraction 40 days after extraction
Benzo(k)flouranthene	3535A, 3540C, 3541, 3545A or 3550C with 8270D	Amber glass with Teflon-lined lid	Cool to 6° C	14 days until extraction 40 days after extraction
Chrysene	3535A, 3540C, 3541, 3545A or 3550C with 8270D	Amber glass with Teflon-lined lid	Cool to 6° C	14 days until extraction 40 days after extraction
Dibenz(a,h)anthracene	3535A, 3540C, 3541, 3545A or 3550C with 8270D	Amber glass with Teflon-lined lid	Cool to 6° C	14 days until extraction 40 days after extraction
TPH (DRO)	3535A, 3540C, 3541, 3545A or 3550C with 8270D	Amber glass with Teflon-lined lid	Cool to 6° C	14 days until extraction 40 days after extraction
TPH (GRO)	5035 with 8015C	Per laboratory SOPs as approved by the SCDHEC Office of Environmental Laboratory Certification		

Analyte	Analytical Method	Container	Preservation	Holding Time
TPH (Oil & Grease)	9071B	Wide-mouth glass container with Teflon-lined lid	Cool to 6° C	28 days
Arsenic	6020A or 7010	Polyethylene or Glass	None	6 months
Barium	6010C or 6020A	Polyethylene or Glass	None	6 months
Cadmium	6010C, 6020A, or 7010	Polyethylene or Glass	None	6 months
Chromium	6010C or 6020A	Polyethylene or Glass	None	6 months
Lead	6010C, 6020A, or 7010	Polyethylene or Glass	None	6 months
Mercury	7471B	Polyethylene or Glass	None	28 days
Selenium	6020A or 7010	Polyethylene or Glass	None	6 months
Silver	6010C, 6020A, or 7010	Polyethylene or Glass	None	6 months
TCLP	1311	See Method for Requirements		
Total Organic Carbon (TOC)	9060A	Polyethylene or Glass	Coot to 4° C	28 days

Appendix G: Domenico Model

Domenico's Model

Contaminant transport in the saturated or the unsaturated zone can be estimated using the **Domenico Model**. This analytical model utilizes three dimensional dispersion, seepage velocity, and biological degradation principles to predict the spatial and temporal decrease in concentration of CoC away from the source.

The Domenico Model (1987) is based on the following assumptions:

1) One dimensional flow and three dimensional (in two transverse directions and one vertical - downwards direction) dispersion;
2) The medium is isotropic and homogeneous;
3) The source concentration is constant;
4) The areal source is perpendicular to the direction of flow; and
5) decay of the contaminant in the dissolved and adsorbed phases occurs at the same rate resulting in a first order decay rate.

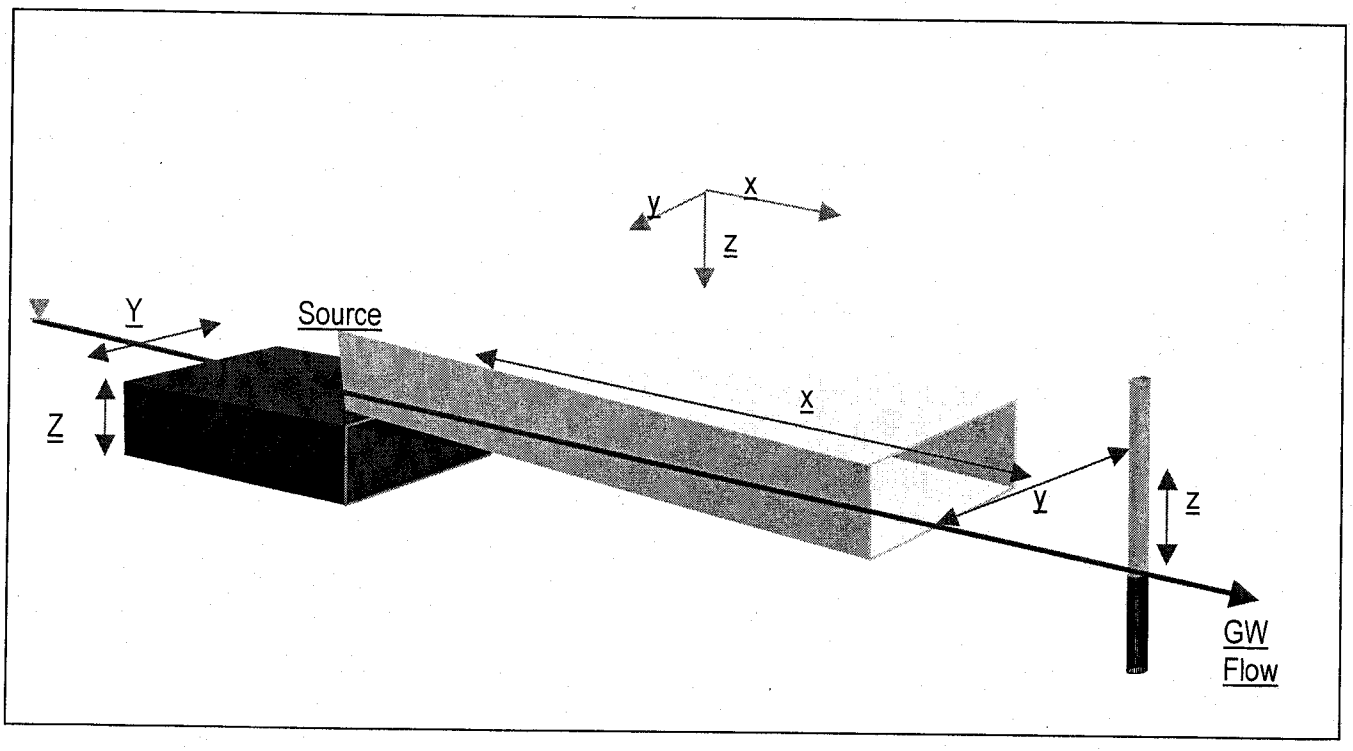

EQUATION 1

This is the general form of the Domenico's Equation. In this equation, the effects of three-dimensional dispersion, one-dimensional uniform flow in the x-direction are considered. The source is considered to be a constant concentration (infinite-mass) areal source of dimension Y and Z (as shown in the Figure D1).

$$C(x,y,z,t) = \left(\frac{C_0}{8}\right) * \exp\left[\left(\frac{x}{2\alpha_x}\right)\left(1-\sqrt{1+\frac{4\lambda\alpha_x}{v}}\right)\right] * erfc\left[\frac{x - vt\sqrt{1+\frac{4\lambda\alpha_x}{v}}}{2\sqrt{\alpha_x vt}}\right] *$$

$$\left\{erf\left[\frac{y+\frac{Y}{2}}{2\sqrt{\alpha_y x}}\right] - erf\left[\frac{y-\frac{Y}{2}}{2\sqrt{\alpha_y x}}\right]\right\} * \left\{erf\left[\frac{z+Z}{2\sqrt{\alpha_z x}}\right] - erf\left[\frac{z-Z}{2\sqrt{\alpha_z x}}\right]\right\}$$

where

C_0 is the Concentration of CoC at source (mg/l)
Y is the width of source perpendicular to GW flow (m)
Z is the vertical thickness of source (m)
x is the distance from source to receptor (x-coordinate) (m)
y is the y coordinate of the receptor relative to source (m)
z is the z coordinate of the receptor relative to source (m)
α_x is the longitudinal dispersivity (m) (x/10)
α_y is the transverse dispersivity (m) (α_x/3)
α_z is the vertical dispersivity (m) (α_x/20)
v is the contaminant velocity (m/s)*
erf is the error function**
erfc is the complimentary error function**
λ is the first order decay rate (1/sec)***
t is the time during which contaminant transport takes place (sec)

* If the CoC adsorbs, the contaminant velocity (v) is replaced by the retarded velocity (v/R), where R is the retardation factor in the saturated zone. The Retardation factor can be calculated with the following equation:

$$R = 1 + \frac{K_{oc} * F_{oc} * B_d * 10^{-6}}{\Phi}$$

where,

K_{oc} is the chemical specific soil/water partitioning coefficient (ml/g) derived from literature.
f_{oc} is the naturally occurring organic carbon (mg/Kg) in soil measured in the saturated zone.
B_d is the Bulk Density (gm/cc).
ϕ is the porosity (decimal %).

** The Error Function and Complimentary Error Function are dimensionless numbers that can be derived from an erf and erfc table. These tables can be found in many hydrogeology textbooks (e.g., Fetter, 1988) .

Please note that: erfc(x) = 1- erf (x); erf(-x) = -erf(x); and erfc(-x) = 1 + erf(x).

*** If the first order decay rates have not been determined on a site-specific basis, the decay rate (λ) shall be assumed to be 0. Site-specific values can be evaluated on the basis of temporal and spatial variation of the CoCs.

EQUATION 2

If the receptor is not located along the x-axis centerline, y and z≠0 and λ= 0.

$$C(x,y,z,t) = \left(\frac{C_0}{8}\right) * erfc\left[\frac{(x - vt)}{2\sqrt{\alpha_x vt}}\right] * \left\{erf\left[\frac{y + \frac{Y}{2}}{2\sqrt{\alpha_y x}}\right] - erf\left[\frac{y - \frac{Y}{2}}{2\sqrt{\alpha_y x}}\right]\right\} * \left\{erf\left[\frac{z + Z}{2\sqrt{\alpha_z x}}\right] - erf\left[\frac{z - Z}{2\sqrt{\alpha_z x}}\right]\right\}$$

EQUATION 3

Equation 3 should be used if the receptor is located along the centerline (x- axis) and hydraulically down-gradient of the source. In that case, y = z = 0 and λ = 0.

$$C(x,0,0,t) = \left(\frac{C_0}{2}\right) * erfc\left[\frac{(x - vt)}{2\sqrt{\alpha_x vt}}\right] * erf\left[\frac{Y}{4\sqrt{\alpha_y x}}\right] * erf\left[\frac{Z}{2\sqrt{\alpha_z x}}\right]$$

Variation of a CoC with time is according to an exponential relationship. Figure D2 shows the change in the CoC concentrations for a source of C_0=2 mg/L and with dimensions Y=10m, Z=3m, x=100m, and Vs=1E^{-5}m/s; λ =0 /s. The concentrations for the time t=0 to 10 years were calculated and are tabulated as shown. Based on the graph, we see that the CoC concentrations increase as the time increases, becoming asymptotic at a value of 72.48 µg/L. From this graph, it can be seen that the maximum concentration of 72.48 µg/L can be reached at the receptor for the given continuous source and hydrological conditions after five years.
Data calculated to be used in this example are given in the table below.

Figure D2

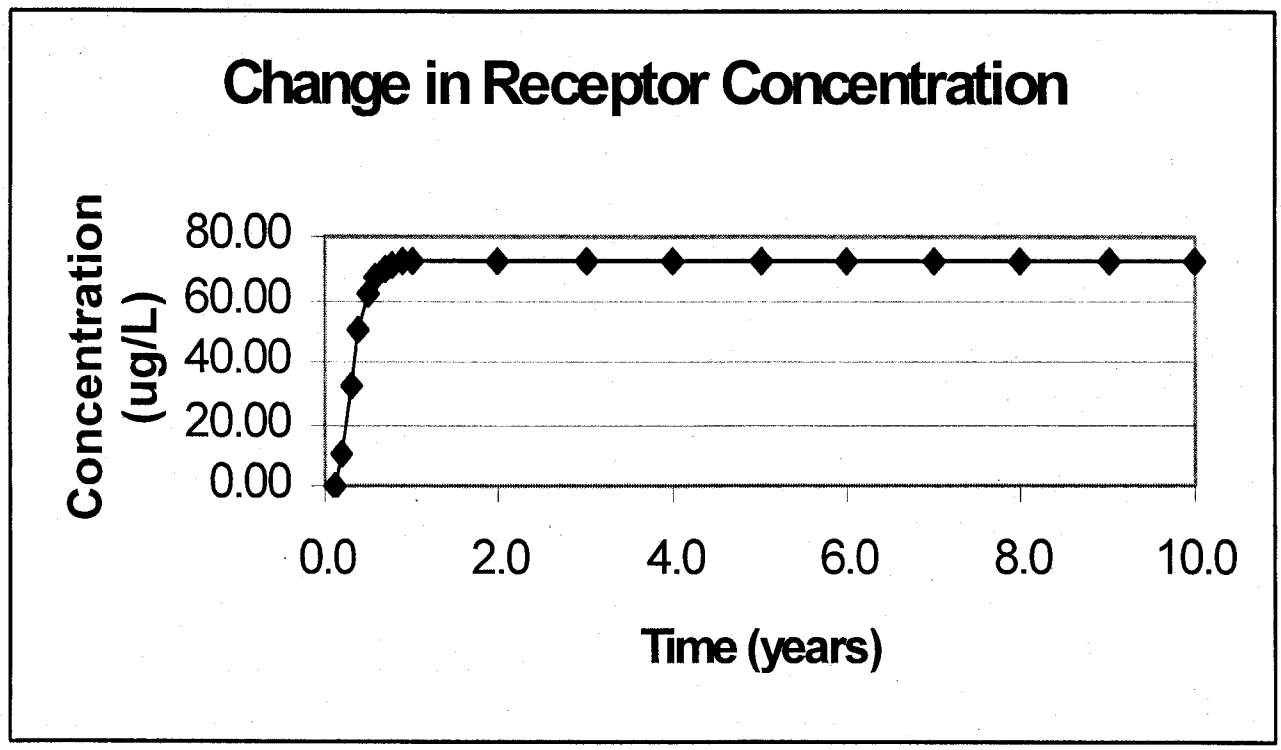

Time (Year)	0.1	0.2	0.3	0.4	0.5	0.6	0.7	0.8	0.9	1.0	2.0	3.0	4.0	5.0	6.0	7.0	8.0	9.0	10.0
CoC Conc.(µ/L)	0.16	10.7	32.6	50.6	61.6	67.4	70.2	71.5	72.1	72.3	72.4	72.4	72.5	72.5	72.5	72.5	72.5	72.5	72.5

SSTL CALCULATIONS

Using the Domenico's model, one can calculate the SSTLs for a given source and receptor configuration for each CoC. Knowing the RBSL for a given receptor, the inverse of the Domenico's equation can be used to calculate the SSTL.

The following equation can be used.

$$C_{sstl} = \frac{8 * C_{rbsl}}{\exp\left[\left(\frac{x}{2\alpha_x}\right)\left(1-\sqrt{1+\frac{4\lambda\lambda_x}{v}}\right)\right] * \operatorname{erfc}\left[\frac{x - vt\sqrt{1+\frac{\lambda\alpha_x}{v}}}{2\sqrt{\alpha_x vt}}\right] * \left\{\operatorname{erf}\left[\frac{y+\frac{Y}{2}}{2\sqrt{\alpha_y x}}\right] - \operatorname{erf}\left[\frac{y-\frac{Y}{2}}{2\sqrt{\alpha_y x}}\right]\right\} * \left\{\operatorname{erf}\left[\frac{z+Z}{2\sqrt{\alpha_z x}}\right] - \operatorname{erf}\left[\frac{z-Z}{2\sqrt{\alpha_z x}}\right]\right\}}$$

where

C_{rbsl} is the RBSL concentration for the selected CoC.

Figure D3 shows the change in the CoC concentrations for a source of Y= 10m; Z=3m , x=100m, Vs=1E-5m/s and λ=0 /s. The source concentrations are calculated for a t=0 to 10 years and are plotted as shown. Based on the graph, we can see that the CoC concentrations decrease as the time increases, becoming asymptotic at a value of 137.98 μg/L. From this graph, it can be seen that the minimum SSTL can be established to be at a concentration of 137.98 μg/L after 0.9 year. The data are given in the table below.

Figure D3

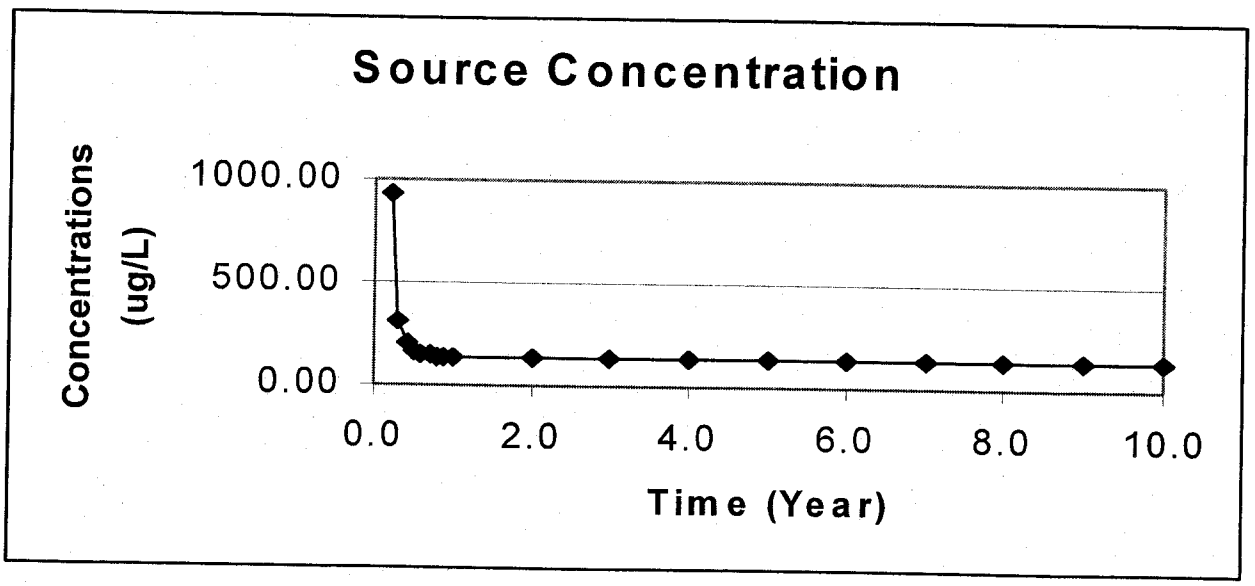

Time (year)	0.1	0.2	0.3	0.4	0.5	0.6	0.7	0.8	0.9	1.0	2.0	3.0	4.0	5.0	6.0	7.0	8.0	9.0	10. 0
CoC Conc.(μ/L)		93630	619	716	2	14814	213	913	8	13813	813	813	8	13813	813	813	8	13813	8

Appendix H: Standard Field Cleaning Procedures

STANDARD FIELD CLEANING PROCEDURES

Introduction

Cleaning procedures in this appendix are intended for use by field personnel for cleaning sampling and other equipment in the field. Emergency field sample container cleaning procedures are also included; however, they should not be used unless absolutely necessary. Deviations from these procedures should be documented in the approved study plan, field records, and investigative reports.

These are the materials, methods, and procedures to be used when cleaning sampling and other equipment in the field.

Caution – Exercise care when working with flammable solvents! Avoid any activity that would produce sparks or excess heat. Avoid hazardous atmospheres.

Specifications for Cleaning Materials:

Specifications for standard cleaning materials referred to in this appendix are as follows:

- Soap shall be a standard brand of phosphate-free laboratory detergent such as Liquinox. Use of other detergent must be justified and documented in the field logbooks and inspection or investigative reports. The use of Luminox detergent may remove the need to rinse with pesticide –grade isopropanol.
- Solvent shall be pesticide-grade isopropanol. Use of a solvent other than pesticide-grade isopropanol for equipment cleaning purposes must be justified in the study plan.
- Tap water may be used from any municipal water treatment system.
- Analyte free water (deionized water) is tap water that has been treated by passing through a standard deionizing resin column and followed by an activated carbon column.
- Other solvents may be substituted for a particular purpose if required. For example, removal of concentrated waste materials may require the use of either pesticide-grade hexane or petroleum ether. After the waste material is removed, the equipment must be subjected to the standard cleaning procedure. Because these solvents are not miscible with water, the equipment must be completely dry prior to use.

Solvents, laboratory detergent, and rinse waters used to clean equipment shall not be reused during field decontamination.

Handling and Containers for Cleaning Solutions:

Improperly handled cleaning solutions may easily become contaminated. Storage and application containers must be constructed of the proper materials to ensure their integrity. Following are acceptable materials used for containing the specified cleaning solutions:

- Soap must be kept in clean plastic, metal, or glass containers until used. It should be poured directly from the container during use.

- Solvent must be stored in the unopened original containers until used. They may be applied using a Teflon® squeeze bottles.

- Tap water may be kept in clean tanks, squeeze bottles, or applied directly from a hose.

- Analyte free water must be stored in clean glass, stainless steel, or plastic containers that can be closed prior to use. It can be applied from plastic squeeze bottles.

Disposal of Solvent Cleaning Solutions:
Procedures for the safe handling and disposition of investigation derived waste (IDW), including used wash water, rinse water, and spent solvents must be specified in the QAPP Addendum.

Equipment Contaminated with Concentrated Wastes:
Equipment used to collect samples of hazardous materials or toxic wastes or materials from hazardous waste sites, RCRA facilities, or in-process waste streams should be field cleaned before returning from the study. At a minimum, this should consist of washing with soap and rinsing with tap water. More stringent procedures may be required at the discretion of the field investigators.

Safety Procedures for Field Cleaning Operations:
Some of the materials used to implement the cleaning procedures outlined in this appendix can be harmful if used improperly. Caution should be exercised by all field investigators and all applicable safety procedures should be followed. At a minimum, the following precautions should be taken in the field during these cleaning operations:

- Safety glasses with splash shields or goggles, and nitrile gloves should be worn during all cleaning operations.
- Solvent rinsing operations will be conducted in the open (never in a closed room).
- No eating, smoking, drinking, chewing, or any hand to mouth contact should be permitted during cleaning operations.

Handling of Cleaned Equipment:
After field cleaning, equipment should be handled only by personnel wearing clean gloves to prevent re-contamination. In addition, the equipment should be moved away (preferably upwind) from the cleaning area to prevent recontamination. If the equipment is not to be immediately re-used it should be covered with plastic sheeting or wrapped in aluminum foil to prevent re-contamination. The area where the equipment is kept prior to re-use must be free of contaminants.

Field Equipment Cleaning Procedures
Sufficient clean equipment should be transported to the field so that an entire study can be conducted without the need for field cleaning. However, this is not possible for some items such as portable power augers (Little Beaver®), well drilling rigs, soil coring rigs, and other large pieces of field equipment. In addition, particularly during large scale studies, it is not practical or possible to transport all of the pre-cleaned field equipment required into the field. In these instances, sufficient pre-cleaned equipment should be transported to the field to perform at least one days work. The following procedures are to be utilized when equipment must be cleaned in the field.

Specifications for Decontamination Pads
Decontamination pads constructed for field cleaning of sampling and drilling equipment should meet the following minimum specifications:

- The pad should be constructed in an area known or believed to be free of surface contamination.
- The pad should not leak excessively.
- If possible, the pad should be constructed on a level, paved surface and should facilitate the removal of wastewater. This may be accomplished by either constructing the pad with one corner lower than the rest, or by creating a sump or pit in one corner or along one side. Any sump or pit should also be lined.

- Sawhorses or racks constructed to hold equipment while being cleaned should be high enough above ground to prevent equipment from being splashed.
- Water should be removed from the decontamination pad frequently.
- A temporary pad should be lined with a water impermeable material with no seams within the pad. This material should be either easily replaced (disposable) or repairable.

At the completion of site activities, the decontamination pad should be deactivated. The pit or sump should be backfilled with the appropriate material designated by the site project leader, but only after all waste/rinse water has been pumped into containers for disposal. No solvent rinsates will be placed in the pit. Solvent rinsates should be collected in separate containers for proper disposal. If the decontamination pad has leaked excessively, soil sampling may be required.

"Classic Parameter" Sampling Equipment:

"Classic Parameters" are analyses such as oxygen demand, nutrients, certain inorganics, sulfide, flow measurements, etc. For routine operations involving classic parameter analyses, water quality sampling equipment such as Kemmerers, buckets, dissolved oxygen dunkers, dredges, etc., may be cleaned with the sample or analyte-free water between sampling locations. A brush may be used to remove deposits of material or sediment, if necessary. If analyte-free water is used samplers should be flushed at the next sampling location with the substance (water) to be sampled, but before the sample is collected.

Flow measuring equipment such as weirs, staff gauges, velocity meters, and other stream gauging equipment may be cleaned with tap water between measuring locations, if necessary.

NOTE: The previously described procedures are not to be used for cleaning field equipment to be used for the collection of samples undergoing trace organic or inorganic constituent analyses.

Sampling Equipment used for the Collection of Trace Organic and Inorganic Compounds:

The following procedures are to be used for all sampling equipment used to collect routine samples undergoing trace organic or inorganic constituent analyses:

1. Clean with tap water and soap using a brush if necessary to remove particulate matter and surface films. Equipment may be steam cleaned (soap and high pressure hot water) as an alternative to brushing. Sampling equipment that is steam cleaned should be placed on racks or saw horses at least two feet above the floor of the decontamination pad. PVC or plastic items should not be steam cleaned.
2. Rinse thoroughly with tap water.
3. Rinse thoroughly with analyte free water.
4. Rinse thoroughly with solvent. Do not solvent rinse PVC or plastic items.
5. Remove the equipment from the decontamination area and cover with plastic. Equipment stored overnight should be wrapped in aluminum foil and covered with clean, unused plastic., or hermetically seal in an appropriately sized polyethylene bag.

Well Sounders or Tapes:

1. Wash with soap and tap water.
2. Rinse with tap water.
3. Rinse with analyte free water. (Do not solvent rinse PVC or plastic items.)

Fultz Pump Cleaning Procedure:

CAUTION - To avoid damaging the Fultz pump:

- Never run pump when dry

- Never switch directly from the forward to the reverse mode without pausing in the "OFF" position

The Fultz® pump should be cleaned prior to use and between each monitoring well. The following procedure is required:
1. Pump a sufficient amount of soapy water through the hose to flush out any residual purge water.
2. Using a brush, scrub the exterior of the contaminated hose and pump with soapy water. Rinse the soap from the outside of the hose with tap water. Rinse the hose with analyte-free water and recoil onto the spool.
3. Pump a sufficient amount of tap water through the hose to flush out all the soapy water (approximately one gallon).
4. Pump a sufficient amount of analyte-free water through the hose to flush out the tap water, then purge with the pump in the reverse mode.
5. Rinse the outside of the pump housing and hose with analyte-free water (approximately 1/4 gal.).
6. Place pump and reel in clean plastic bag.

Peristaltic Pump Cleaning Procedure:
CAUTION - During cleaning always disconnect the pump from the generator.
The peristaltic pump should be cleaned prior to use and as necessary between each use.
The following procedure is required:
1. Using a brush, scrub the exterior of the contaminated hose and pump with soap and tap water.
2. Rinse the soap from the outside of the pump and hose with tap water.
3. Rinse the tap water residue from the outside of pump and hose with analyte-free water.
4. Allow the pump to dry prior to use.

Redi-Flo2 Pump:
The Redi-Flo2 pump should be cleaned prior to use and between each monitoring well. The following procedure is required:
CAUTION - Make sure the pump is not plugged in.
1. Using a brush, scrub the exterior of the pump, electrical cord and garden hose with soap and tap water. Do not wet the electrical plug.
2. Rinse with tap water.
3. Rinse with analyte free water.
4. Place the equipment in a clean plastic bag.
To clean the Redi-Flo2 ball check valve:
1. Completely dismantle ball check valve. Check for wear and/or corrosion, and replace as needed.
2. Using a brush, scrub all components with soap and tap water.
3. Rinse with analyte free water.
4. Reassemble and re-attach the ball check valve to the Redi-Flo2 pump head.

Automatic Sampler Tubing:
The Silastic and Tygon tubing previously used in the automatic samplers may not be reused. All tubing must be replaced with new tubing.

Downhole Drilling Equipment
These procedures are to be used for drilling activities involving the collection of soil samples for trace organic and inorganic constituent analyses, and for the construction of monitoring wells to be used for the collection of groundwater samples for trace organic and inorganic constituent analyses.

Introduction:
Cleaning and decontamination of all equipment should occur at a designated area (decontamination pad) on the site. The decontamination pad should meet the specifications of the *Specifications for Decontamination Pads Section* of this Appendix.

Tap water (potable) brought on the site for drilling and cleaning purposes should be contained in a pre-cleaned tank of sufficient size so that drilling activities can proceed without having to stop and obtain additional water.
A steam cleaner and/or high pressure hot water washer capable of generating a pressure of at least 2500 PSI and producing hot water and/or steam (200°F plus), with a soap compartment, should be obtained.

Preliminary Cleaning and Inspection:
The drill rig should be clean of any contaminants that may have been transported from another hazardous waste site, to minimize the potential for cross-contamination. Further, the drill rig itself should not serve as a source of contaminants. In addition, associated drilling and decontamination equipment, well construction materials, and equipment handling procedures should meet these minimum specified criteria:

- All downhole augering, drilling, and sampling equipment should be sandblasted before use if painted, and/or there is a buildup of rust, hard or caked matter, etc., that cannot be removed by steam cleaning (soap and high pressure hot water), or wire brushing. Sandblasting should be performed prior to arrival on site, or well away from the decontamination pad and areas to be sampled.

- Any portion of the drill rig, backhoe, etc., that is over the borehole (kelly bar or mast, backhoe buckets, drilling platform, hoist or chain pulldowns, spindles, cathead, etc.) should be steam cleaned (soap and high pressure hot water) and wire brushed (as needed) to remove all rust, soil, and other material which may have come from other hazardous waste sites before being brought on site.

- Printing and/or writing on well casing, tremie tubing, etc., should be removed before use. Emery cloth or sand paper can be used to remove the printing and/or writing. Most well material suppliers can supply materials without the printing and/or writing if specified when ordered.

- The drill rig and other equipment associated with the drilling and sampling activities should be inspected to insure that all oils, greases, hydraulic fluids, etc., have been removed, and all seals and gaskets are intact with no fluid leaks.

- PVC or plastic materials such as tremie tubes should be inspected. Items that cannot be cleaned are not acceptable and should be discarded.

Drill Rig Field Cleaning Procedure:
Any portion of the drill rig, backhoe, etc., that is over the borehole (kelly bar or mast, backhoe buckets, drilling platform, hoist or chain pulldowns, spindles, cathead, etc.) should be steam cleaned or cleaned with soap and high pressure water between boreholes.

Field Cleaning Procedure for Drilling Equipment:
The following is the standard procedure for field cleaning augers, drill stems, rods, tools, and associated equipment. This procedure does not apply to well casings, well screens, or split-spoon samplers used to obtain samples for chemical analyses, which should be cleaned as outlined in Section B.2.3.

1. Clean with tap water and soap, using a brush if necessary, to remove particulate matter and surface films. Steam cleaning or cleaning with high pressure water with soap may be necessary to remove matter that is difficult to remove with the brush. Drilling equipment that is steam cleaned should be placed on racks or saw horses above the ground. Hollow-stem augers, drill rods, etc., that are hollow or have holes that transmit water or drilling fluids, should be cleaned on the inside with vigorous brushing.
2. Rinse thoroughly with tap water.
3. Remove from the decontamination pad and cover with clean, unused plastic. If stored overnight, the plastic should be secured to ensure that it stays in place.

When there is concern for low-level contaminants it may be necessary to clean this equipment between borehole drilling and/or monitoring well installation using the procedure outlined in the *Sampling Equipment used for the Collection of Trace Organic and Inorganic Compounds Section* of this Appendix.

Emergency Disposable Sample Container Cleaning

New one-pint or one-quart glass mason jars may be used to collect samples for analyses of organic compounds and metals in waste and soil samples during an emergency. In the case of chemicals that adhere to glass, PPE or HDPE mason jars may be used to collect samples. These containers would also be acceptable on an emergency basis for the collection of water samples for extractable organic compounds, pesticides, and metals analyses. These jars cannot be used for the collection of water samples for volatile organic compound analyses.

The rubber sealing ring should not be in contact with the jar and aluminum foil should be used, if possible, between the jar and the sealing ring. If possible, the jar and aluminum foil should be rinsed with pesticide-grade isopropanol and allowed to air dry before use. Several empty bottles and lids should be submitted to the laboratory as blanks for quality control purposes.

Appendix I: Pump Operating Procedures

PUMP OPERATING PROCEDURES

Peristaltic Pump

1.1 Introduction:
When relatively small volumes of water are required for purging and sampling, and the water level is within the limit of suction (generally around 25 feet vertical separation between the pump and water surface) peristaltic pumps can be used. These pumps are generally small, light-weight, and portable and are powered by 12-volt batteries.
The application of these pumps differs with respect to purging and sampling. The following sections detail the use of peristaltic pumps for both purposes.

1.2 Purging with a Peristaltic Pump:
I. Place a coil of standard-cleaned (Appendix B) tubing of appropriate composition, equal to the well depth plus an additional five to ten feet, in a standard cleaned bucket or box which has been lined with clean plastic sheeting or a garbage bag. Enough tubing is needed to run from the ground surface up to the top of the well casing and back down to the bottom of the well. This will allow for operation of the pump at all possible water level conditions in the well.
2. Place one end of the tubing into the vacuum side of the peristaltic pump head. Proper sizing of the tubing should allow for a snug fit of the Teflon® tubing inside the flexible tubing mounted in the pump head.
3. Run a short section of tubing from the discharge side of the pump head to a graduated bucket.
4. Place the free end of the coil of tubing into the well until the end of the tubing is just below the top of the water column.
5. Secure the tubing to the well casing or other secure object using electrician's tape or other suitable means. This will prevent the tubing from being lost in the well should all of the tubing be deployed and come loose from the pump head.
6. Turn on the pump to produce a vacuum on the well side of the pump head and begin the purge. Observe pump direction to ensure that a vacuum is being applied to the purge line. If the purge line is being pressurized, either switch the tubing at the pump head or reverse the polarity of the cables on the pump or on the battery.
7. Purge the well according to the criteria described in Section 7.2 of this manual. If the pumping rate exceeds the recovery rate of the well, continue to lower the tubing into the well several feet at a time, as needed, until the drawdown stabilizes or the well is evacuated to dryness. If the pump is a variable speed peristaltic pump, and the water level in the well is being drawn down, reduce the speed of the pump in an attempt to stabilize the drawdown. If the well can be purged without evacuating the well to dryness, a sample with greater integrity can be obtained.
8. For wells, which are not evacuated to dryness, particularly those with recovery rates equal to or very nearly equal to the purge rate, there may not be a complete exchange and removal of stagnant water in that portion of the water column above the tubing intake. For this reason, it is important that the tubing intake be placed in the very uppermost portion of the water column while purging. Standard field measurements should frequently be taken during this process to verify adequacy of the purge.

1.3 Sampling with a Peristaltic Pump:
Flexible tubing used in peristaltic pump heads is not acceptable for collecting samples for organic compounds analyses and cannot easily be field cleaned between sampling locations prior to collecting samples for other parameters. For these reasons, it is necessary to use a vacuum container, placed between the pump and the well for sample collection with a peristaltic pump. However, if the flexible pump tubing is decontaminated, samples for analyses of some inorganic constituents may be collected through the tubing if blanks are collected. This method is detailed in the following steps.
NOTE: Samples for volatile organic compound analyses cannot be collected using this method. If samples for VOC analyses are required, they must be collected with a Teflon® or stainless steel bailer or by other approved methods, such as the straw method. The straw method involves allowing the tubing to fill, by either lowering it into the water column or filling it via suction applied by the pump head. Upon filling, the tubing is removed from the well and allowed to drain into the sample vial. This is repeated, as necessary, until all vials are filled.
1. Disconnect the purge tubing from the pump. Make sure the tubing is securely attached to the protective casing or other secure object.
2. Insert the tubing into one of the ferrule nut fittings of a Teflon® vacuum container transfer cap assembly.

3. Place a suitable length of tubing (Teflon® if for VOCs) between the remaining transfer cap assembly ferrule nut fitting and the vacuum side of the flexible tubing in the peristaltic pump head. Securely hand tighten both fittings.
4. Turn the pump on. Water should begin to collect in the transfer container (typically a 4-liter or 1-gallon sample container) within a few minutes. If water does not begin to flow into the container within five minutes, check the transfer cap fittings and make sure the assembly is tightly attached to the container. It may be necessary to tighten the ferrule nuts with a wrench or pliers to achieve a vacuum in the system, particularly when approaching the maximum head difference between the pump and water table.
5. When the transfer container is nearly full, turn off the pump, remove the transfer cap assembly, and pour the sample into the appropriate containers. Samples to be analyzed for extractable organic compounds, metals, and cyanide can be collected using this system.
6. If additional sample volume is needed, replace the transfer cap assembly, turn the pump on, and collect additional volume. The use of Teflon® valves or ball check devices to retain the water column in the sample delivery tubing during the transfer phase, when large volumes of sample are required, is acceptable. These devices, however, must be constructed so that they may be completely disassembled and cleaned.
7. When sampling is completed, all Teflon® tubing should be discarded.

Fultz Pump

2.1 Introduction:
The Fultz pump is a small 24-volt DC submersible pump suitable for purging most 2-inch and some 4-inch wells and is available in two different diameters, 1.75 inches and 2.5 inches. Operating depths for these pumps range from approximately 135 feet to 150 feet. Maximum pump rates range from approximately 1.5 gallons per minute, at shallower depths, to less than 0.5 gallon per minute at the maximum operating depth. For a given depth, the 2.5-inch pump has a slightly higher pumping rate, than smaller diameter pump. The pump housing for each pump is constructed of 304 stainless steel and houses a high efficiency electric motor and Teflon® gears (rotors). Water is pulled through a fine-mesh stainless steel screen on the pump head by the meshing rotors and is positively displaced through the discharge hose.
As supplied from the manufacturer, power for the pump is supplied by an internal power pack comprised of four 6-volt gel cell batteries. The manufacturer also offers an external power pack, containing the same array of batteries as the internal supply, and a 24-volt DC generator as optional power sources. It has been found that the pumps operate at higher rates and for longer periods of time when powered either with the generator or with two 12-volt car or motorcycle batteries connected to provide 24 volts.

2.2 Operation:
Control Panel Switch Functions
The following is a list of switch functions found on the control panel of the Fultz7 pump:

- ON Supplies power from selected power source to pump motor.
- OFF Turns pump off.
- INTERNAL Selects the internal battery array as the power source for the pump. Note: Because the external sources are more reliable and provide longer service, the internal batteries have been removed from all pumps.
- EXTERNAL Selects an external power source. Source must be plugged into the front panel at exterior source plug.
- FORWARD Selects forward operating mode, used to pump water from the source.
- REVERSE Selects reverse operating mode, used to empty water from hose through pump head and to flush silt from pump screen, when clogged.

CAUTION: Always turn the power off before changing direction of pump to prevent damage to unit or fuse failure.

Purging Procedures

The following steps detail the operation of the Fultz pump when used for purging monitoring wells. This pump is not used for sampling.

1. Select external power source to be used. If a generator is used, plug in to external source jack and place generator as far from the well as possible in the downwind direction. If 12-volt batteries are used, connect batteries with provided cables to provide 24 volts. Bridge the positive post of one battery to the negative post of the other. Next, place the red clip from the main supply cable (the long cable which plugs into the face of the control panel of the pump) on the remaining positive post and place the black clip on the remaining negative post.
2. Check pump head to make sure pump and electrical connections are secure.
3. Lower pump into well, placing pump head no more than one or two feet below the top of the water column.
4. Turn pump on and make sure REVERSE/FORWARD switch is in FORWARD position. If the polarity of the power connection is reversed, the amp meter will deflect to the left and the pump will be running opposite of the selected direction. Make the appropriate change.
5. During normal operating conditions, the pump should pull no more than 1.5 to 2.0 amps. Newly replaced rotors may temporarily pull slightly more amps. Check amp meter on control panel to make sure that the pump is operating in this normal range.
6. Listen to the pump, as this is an indication of the amount of water over the pump. As the water level is pulled down, the pitch of the sound will increase and become louder. If the water level is pulled down, lower the pump another one or two feet and continue to listen to the sound of the pump.
7. If the water level is rapidly lowered, caution must be observed as the pump is lowered in the vicinity of the bottom of the well. In this region, be sure to observe the clarity of the water and the amps being registered on the amp meter. If the water becomes extremely turbid and the amps increase beyond the acceptable range, these are indications that the pump has been lowered into silt at the bottom of the well. If this occurs, the pump should be momentarily reversed to dislodge the silt from the screen and rotors. If more volume is required to fully evacuate the well under these conditions, a bailer may be a more appropriate choice for the remainder of the purge.
8. After completing the required purge, remove the pump from the well and reverse the motor to empty the pump and hose of all contained water. The pump should be switched off as soon as the last water is discharged, since running the pump dry may damage the rotors. This water should be collected with the other purge water and handled appropriately. The pump and wetted portion of the hose may now be decontaminated prior to use at the next sampling location.

2.3 Tips and Precautions:

The following tips and precautions should be observed for best performance and operating conditions.

1. Watch the hose for kinks as the pump is lowered into the well, particularly checking what remains on the hose frame. Kinks will decrease pump performance and will generally manifest themselves as decreased output with higher amp meter readings. Badly kinked hose should be "red-tagged" for replacement.
2. Before going to the field, the pump's performance should be checked. At zero head, a properly operating Fultz7 pump should pump 1.1 to 1.2 gallons per minute. If much less than 1.1 gallons per minute is pumped, the rotors should be replaced and the pump re-checked. Worn rotors do not merely decrease the pump rate, they also reduce the operating head of the pump.
3. Make sure spare fuses are available. The 1.75-inch diameter pump heads require 2.5 amp fuses. The 2.5-inch diameter pump heads require 5 amp fuses.

2.4 Rotor Replacement:

Remove the five screws that hold the pump head on. Carefully rotate the pump cover at the wire, exposing the rotors. With needle-nose pliers, grip each rotor by a tooth and pull it out. Replace with new rotors by pushing them into place with your thumb. Be careful not to shave off the sides of the teeth on the pump body. Replace the pump cover and five screws. Gently snug the screws into place and back them off one turn. Place the pump in a bucket of water and, while running, gradually tighten the screws. This will wear off any burrs on the rotors and give the best performance.

2.5 Trouble Shooting:

No Power to Pump	1. Loose connection to power supply.	1. Make sure clips on battery are snug.
	2. Water leakage into motor.	2. Return to factory.
Pump Output Reduced	1. Hose kinked	1. Straighten hose.
	2. Rotors worn	2. Replace rotors.
	3. Intake clogged	3. Reverse pump direction to clear.
	4. Power supply low	4. Replace batteries.
	5. Silt or sediment in water.	5. If too bad, discontinue pump use.
High Amp Meter Reading	1. Pump out of water.	1. Lower pump into water column.
	2. Silt or sediment in water.	2. Watch amp reading. If it exceeds the recommended operating range, reverse direction of pump to clear intake. If this does not work, discontinue pumping and use bailer.

Large Diameter Electric Submersible Pumps

3.1 Introduction:

Pumps included within this category are any of the typical, large diameter (3-inch to 4-inch) electric submersibles. These pumps are necessary when large amounts of water must be removed from wells such as deep, 4-inch monitoring wells and drilled or bored potable wells.

These pumps are generally powered by 120-volt generators and require a minimum of two persons for operation. As such, utmost care should be observed to ensure the safe operation of this equipment, particularly from an electrical hazard standpoint. The following sections detail the safety and operation of these pumps.

3.2 Safety:

1. Place the generator on dry ground or plastic sheeting as far as practical from the well, in the down-wind direction, and ground it. Several grounding kits consisting of a roll of copper wire and a grounding rod are available. Wet the ground thoroughly with tap water at the grounding location, if dry, and drive the grounding rod several feet into the ground.
2. Inspect the electrical cord for frays, breaks, exposed wiring, etc.
3. Check the headspace of the well for the presence of an explosive atmosphere with a combustible gas meter.
4. A minimum of two people are required to place, retrieve, and operate these pumps safely. If they are used without the aid of the tripod, i.e., all electrical and suspension lines are spooled separately, at least three people are needed to successfully lower and raise the pumps.
5. Wear rubber safety boots to insulate against shock hazards.

6. If purge water is not collected, direct the discharge away from the well and generator, preferably downgradient of area.
7. Make sure that the generator is set to proper voltage.
8. Do not add gasoline or oil to the generator while it is running.
9. Carry the generator, gasoline, and oil in a trailer dedicated to this type of equipment. Do not haul this equipment in the back of any passenger vehicle or with any sampling equipment or containers.

3.3 Pre-loadout Checkout Procedure:

1. Check the oil and gasoline in generator, filling up as needed. Take generator outside and start it. Place a load on the generator, if possible.
2. Inspect the pump, and all hose, rope and electrical cord and connections.

3.4 Operation:

1. Connect pump to steel winch cable. Using winch crank, lower pump, hose and electrical cord into the well. If no tripod is available, lower the pump into the well by hand. This will require at least three people, one to lower pump with the rope, one to feed the hose and cord into the well, maintaining proper tension, and one to feed rope, hose and electrical cord from cart. **NOTE: Keep all hose, electrical cord and cable off of the ground at all times. Do not allow the rope, cord, or the hose to scrape or rub on the well casing.**
2. Place pump five feet below the top of the water column.
3. Start generator, then connect power cord from pump.
4. After starting pump, closely observe operation to determine if drawdown is occurring in well. If the water level is not pulled down significantly, keep pump at initial level and continue to purge. If the water level drops, lower the pump to keep up with the drawdown. Do not allow the pump to run dry, as this will damage it.

3.5 Maintenance and Precautions:

1. Do not put away wet.
2. Empty hose of contaminated water before leaving sampling location. Do not bring back hose with water in it.
3. Do not pump dry.
4. Do not run generator without checking oil.

3.6 Trouble Shooting:

No Power to Pump	1. Loose connections at pump.	1. Check wiring at pump. Repair as needed. (Generator Off!!)
	2. Cord unplugged at generator.	2. Plug pump back in.
Generator Running, No Pump Output	1. Pump out of water.	1. Lower pump into water.
	2. Hose collapsed or kinked.	2. Unkink hose.
	3. Generator output failing.	3. Put load on generator and check output or check voltage output meter.
Sluggish Discharge	1. Sediment or other material clogging screen.	1. Remove material from screen.
	2. Kinked hose.	2. Unkink hose.

Appendix J: UST Management Division Retention Schedule

COPY

DEPARTMENT OF HEALTH
AND ENVIRONMENTAL CONTROL

Record Group Number: 169

ENVIRONMENTAL QUALITY CONTROL

BUREAU OF LAND AND WASTE MANAGEMENT

UNDERGROUND STORAGE TANK

12300 REHABILITATION INFORMATION

Description

Used to document the clean up process for releases that have occurred at sites with regulated underground storage tanks. Information includes assessment, monitoring reports, corrective action plans, reports, no further action letters or case closure letters, and correspondence.

Retention

All official records: 9 years after no further action letter or a case closure letter is issued, destroy.

(REVISED)

Approval Date: 27 March 2008

Appendix K: Contractor Verification Checklist

Contractor Checklist

For each report submitted to the UST Management Division, the contractor will be required to verify that all data elements for the required scope of work have been provided. For items not required for the scope of work, the N/A box should be checked. For items required and not completed or provided, the No box should be checked and a thorough description of the reason must be provided.

Item #	Item	Yes	No	N/A
1	Is Facility Name, Permit #, and address provided?			
2	Is UST Owner/Operator name, address, & phone number provided?			
3	Is name, address, & phone number of current property owner provided?			
4	Is the DHEC Certified UST Site Rehabilitation Contractor's Name, Address, telephone number, and certification number provided?			
5	Is the name, address, telephone number, and certification number of the well driller that installed borings/monitoring wells provided?			
6	Is the name, address, telephone number, and certification number of the certified laboratory(ies) performing analytical analyses provided?			
7	Has the facility history been summarized?			
8	Has the regional geology and hydrogeology been described?			
9	Are the receptor survey results provided as required?			
10	Has current use of the site and adjacent land been described?			
11	Has the site-specific geology and hydrogeology been described?			
12	Has the primary soil type been described?			
13	Have field screening results been described?			
14	Has a description of the soil sample collection and preservation been detailed?			
15	Has the field screening methodology and procedure been detailed?			
16	Has the monitoring well installation and development dates been provided?			
17	Has the method of well development been detailed?			
18	Has justification been provided for the locations of the monitoring wells?			
19	Have the monitoring wells been labeled in accordance with the UST QAPP guidelines?			
20	Has the groundwater sampling methodology been detailed?			
21	Have the groundwater sampling dates and groundwater measurements been provided?			
22	Has the purging methodology been detailed?			
23	Has the volume of water purged from each well been provided along with measurements to verify that purging is complete?			
24	If free-product is present, has the thickness been provided?			
25	Does the report include a brief discussion of the assessment done and the results?			
26	Does the report include a brief discussion of the aquifer evaluation and results?			
27	Does the report include a brief discussion of the fate & transport models used?			
28	Are the site-conceptual model tables included? (Tier 1 Risk Evaluation)			

Item #	Item	Yes	No	N/A
29	Have the exposure pathways been analyzed? (Tier 2 Risk Evaluation)			
30	Have the SSTLs for each compound and pathway been calculated? (Tier 2 Risk Evaluation)			
31	Have recommendations for further action been provided and explained?			
32	Has the soil analytical data for the site been provided in tabular format? (Table 1)			
33	Has the potentiometric data for the site been provided in tabular format? (Table 2)			
34	Has the current and historical laboratory data been provided in tabular format?			
35	Have the aquifer characteristics been provided and summarized on the appropriate form?			
36	Have the Site conceptual model tables been included? (Tier 1 Risk Evaluation)			
37	Has the topographic map been provided with all required elements? (Figure 1)			
38	Has the site base map been provided with all required elements? (Figure 2)			
39	Have the CoC site maps been provided? (Figure 3 & Figure 4)			
40	Has the site potentiometric map been provided? (Figure 5)			
41	Have the geologic cross-sections been provided? (Figure 6)			
42	Have maps showing the predicted migration of the CoCs through time been provided? (Tier 2 Risk Evaluation)			
43	Has the site survey been provided and include all necessary elements? (Appendix A)			
44	Have the sampling logs, chain of custody forms, and the analytical data package been included with all required elements? (Appendix B)			
45	Is the laboratory performing the analyses properly certified?			
46	Has the tax map been included with all necessary elements? (Appendix C)			
47	Have the soil boring/field screening logs been provided? (Appendix D)			
48	Have the well completion logs and SCDHEC Form 1903 been provided? (Appendix E)			
49	Have the aquifer evaluation forms, data, graphs, equations, etc. been provided? (Appendix F)			
50	Have the disposal manifests been provided? (Appendix G)			
51	Has a copy of the local zoning regulations been provided? (Appendix H)			
52	Has all fate and transport modeling been provided? (Appendix I)			
53	Have copies of all access agreements obtained by the contractor been provided? (Appendix J)			
54	Has a copy of this form been attached to the final report and are explanations for any missing or incomplete data been provided?			

Explanation for missing and incomplete information?

_____

_____

_____

Appendix L: SCDHEC EQC and OCRM Quality Management Plan

From the SC DHEC Quality Management Plan

9.0 COMPUTER HARDWARE AND SOFTWARE

The Department is committed to following Federal/State mandates regarding protection of data, and software/hardware requirements.

The Department's Chief Information Officer (CIO) manages the process of identifying Management Information Technology (IT) needs and developing a cost-effective Management Information System to satisfy those needs. A core group of technical representatives known as IRCJV – Information Resource Consultant Joint Venture Committee, assists the CIO in this effort. Members are from each Deputy area within the Department. The CIO and the IRCJV Committee are responsible for providing standard operating procedures and for identifying and prioritizing IT needs. Together they also evaluate proposed changes that may have the potential for cross-program impact.

The CIO and the Core Group or the appropriate Deputy Managers will identify and prioritize the Department's needs. The Department's Bureau of Business Management is involved in all aspects of procurement dealing with any and all IT projects. Depending on the cost of the project, the State's CIO office within the Budget and Control Board may be involved in the process as well. This process is completed via a work plan that specifies the requirements, responsibilities, and the schedule(s) of deliverables.

All hardware and software solutions are evaluated prior to purchase using industry best practices, experience from other states and demonstrated performance. The Department adheres to all mandatory State procurement guidance to ensure the best price via appropriate market competition for the selected product or service.

A Data Quality Team has been established to ensure the effectiveness and quality assurance of the information produced from or collected by our Environmental Facilities Information System (EFIS) is uniform. The group's long-term goal is to maximize the use of the Department's Enterprise Wide Information Management System. EQC also works closely with EPA to ensure complete and accurate data is submitted through the Exchange Network Node System. The workgroup is currently improving cross program access to data, improving data extraction results and implementing improved public access to Departmental information.

In each Bureau, IT (Information Technology) Staff are assigned to be responsible for maintaining the integrity of the computer databases and information systems within that Bureau. They ensure that the records are backed up routinely and that transfers from one area to another of electronic records are done accurately. This Section also ensures that virus protection is kept up to date on each computer in the Bureau.

Prior to data being input to computer databases, it is checked by the analyst and their supervisor. This review includes a check on the calculations and raw data. A percentage of data is checked by a third data verifier. Once the data is transferred to the Program Areas (the Bureau of Water-for example), that Program area is responsible for the data integrity.

The EQC Monitoring Workgroup is currently leading the effort to enable the Department to receive electronic data deliverables (EDDs) from external laboratories as well as developing a method of producing EDDs from the EQC Laboratories LIMs (Laboratory Information Management System). Our goal is to be able to generate a SEDD Level 2A deliverable within two years. We will begin this effort by implementation on a small project. The Data Quality Team and the EPA will be consulted during this process. The goal of this (ADR) is to further certify that the data quality is sufficient to make sound environmental decisions.

Appendix M: Project Status Update Form

UST Permit #

(Facility Name)

Date	Current Status	Deficiency	Corrective Action Taken	Date Deficiency resolved

Comments: